SYMBOLS

1 TITLE / SHEET / SHEET2 / ARCHITECTURAL REFERENCE	ELEVATION NAME		
1 VIEW TITLE / SCALE	DETAIL NAME		
1	ELEVATION CALLOUT		
1 / 101	SECTION CALLOUT		
	REVISED ITEM		
1	REVISION NUMBER		

NOTES TO GENERAL CONTRACTOR

NOTES TO ARCHITECT

ARCHITECT'S NOTE:
PER THE MANUFACTURE, ANY DOOR ABOVE 102" IN HEIGHT MUST HAVE FULL TOP AND BOTTOM RAILS, PATCH FITTINGS ARE NOT RECOMMENDED BECAUSE OF SAFETY CONCERNS.

INFORMATION AVAILABLE TO PREPARE DRAWINGS

ARCHITECTURAL DRAWINGS DATED – 11/1/2019

DOOR SCHEDULE

DOOR #	DOOR WIDTH	DOOR HEIGHT	ACTIVE LEAF	TYPE	SET
301	6'–0"	9'–0"	OUTSWING	PAIR	3
302	6'–0"	9'–0"	OUTSWING	PAIR	3
304	3'–0"	8'–11 1/2"	INSWING	SINGLE	3
305	3'–0"	9'–0"	INSWING	SINGLE	3
306	3'–0"	9'–0"	INSWING	SINGLE	3
311	3'–0"	7'–10"	INSWING	SINGLE	8
312	3'–0"	7'–10"	INSWING	SINGLE	8
407	3'–0"	8'–0"	OUTSWING	SINGLE	3
408	3'–0"	8'–0"	OUTSWING	SINGLE	3
416	3'–0"	7'–10"	INSWING	SINGLE	8
438	3'–0"	7'–10"	INSWING	SINGLE	8
441A	3'–0"	8'–0"	INSWING	SINGLE	3
441B	3'–0"	8'–0"	OUTSWING	SINGLE	3
442	3'–0"	8'–0"	OUTSWING	SINGLE	3
449A	6'–0"	10'–8"	OUTSWING	PAIR	2
449B	6'–0"	10'–8"	OUTSWING	PAIR	2

GENERAL NOTES

1.) LIMITATIONS: THESE DRAWINGS REPRESENT AN INTERPRETATION OF ARCHITECTURAL INFORMATION MADE AVAILABLE TO KS DRAFTING & DESIGN, LLC. KS DRAFTING & DESIGN, LLC. MAKES NO REPRESENTATION OR WARRANTY TO THE PERFORMANCE OR COMPLETENESS OF THE ARCHITECTURAL DETAILS OF THE SURROUNDING AREAS.

2.) CONFIRMATION: ANY LISTED TOLERANCES, DIMENSIONS, DEFLECTION, ANCHORAGE, REFERENCES, AND FUNCTIONAL PERFORMANCE REQUIREMENTS SHALL BE CONFIRMED WITH THE ARCHITECT, AND VALIDATED BY FIELD MEASUREMENTS TO ENSURE SIZING, PERFORMANCE COMPLIANCE, AND ARCHITECTURAL INTENT.

3.) ACCEPTANCE: FINAL APPROVAL OF THESE DRAWINGS CONSTITUTES ACCEPTANCE OF ALL DEVIATIONS, IF ANY, AND ALL WORK CONTAINED HEREIN.

4.) USE: KS DRAFTING & DESIGN, LLC. ASSUMES NO RESPONSIBILITY FOR THE USE OF THESE DRAWINGS BY OTHER TRADES.

5.) COMPLIANCE: ARCHITECT, ENGINEER, GENERAL CONTRACTOR, AND MISC. TRADES ARE RESPONSIBLE FOR THE SELECTION, INSTALLATION, AND ADJUSTMENT OF SYSTEMS TO ENSURE COMPLIANCE WITH ALL APPLICABLE DESIGN, ENERGY, RATING, BUILDING, AND/ OR SAFETY CODES.

6.) QUALITY OF CONSTRUCTION: ROUGH OPENINGS MAY NOT BE PLUMB, SQUARE, OR LEVEL. CONTRACTOR TO VERIFY EXISTING OPENINGS.

7.) RELEASE OF LIABILITY: THESE DRAWINGS HAVE BEEN PREPARED BY KS DRAFTING & DESIGN, LLC. FOR USE BY THE CUSTOMER. THE CUSTOMER AGREES TO ASSUME ALL LIABILITY AND ANY CLAIMS THAT MAY ARISE FROM THE USE OF, OR INFORMATION CONTAINED IN THESE DRAWINGS.

SHEET LIST

SHEET	DESCRIPTION
100	COVER SHEET
200	THIRD FLOOR PLAN
201	FOURTH FLOOR PLAN
202	FRAME ELEVATIONS
203	FRAME ELEVATIONS
204	FRAME ELEVATIONS
205	FRAME ELEVATIONS
206	FRAME ELEVATIONS
400	DETAILS
401	DETAILS
402	DETAILS

NO.	REVISION/ISSUED	DATE
1	1ST SUBMITTAL	2/18/2020

GLASS SCHEDULE

MARK	GLAZING DESCRIPTION AND MAKEUP		NOTES
GL-1	DESCRIPTION	1/4" CLEAR, TEMPERED	
GL-2	DESCRIPTION	1/2" CLEAR, TEMPERED	
GL-3	DESCRIPTION	5/8" CLEAR, TEMPERED	

DOOR HARDWARE SCHEDULE

SET	DOOR HARDWARE SET # 2: CRL HARDWARE
2	CR LAURENCE FULL TOP RAIL
2	CR LAURENCE FULL BOTTOM RAIL
2	MAGNETIC LOCK
2	48" STAINLESS PULLS BACK TO BACK
2	BTS 80 FLOOR CLOSERS (HOLD OPENS @ 449A, 449B)
1	MOTION SENSOR
1	PUSH BUTTON
1	CARD READER BY OTHERS

ARCHITECT'S NOTE:
PER THE MANUFACTURE, ANY DOOR ABOVE 102" IN HEIGHT MUST HAVE FULL TOP AND BOTTOM RAILS, PATCH FITTINGS ARE NOT RECOMMENDED BECAUSE OF SAFETY CONCERNS.

SET	DOOR HARDWARE SET # 3: CRL HARDWARE
2	CR LAURENCE FULL TOP RAIL
2	CR LAURENCE FULL BOTTOM RAIL
2	48" STAINLESS STEEL PULLS BACK TO BACK
2	CONCEALED OVERHEAD CLOSERS (HOLD OPENS @ DRS 407, 441A, 441B, 442)

ARCHITECT'S NOTE:
PER THE MANUFACTURE, ANY DOOR ABOVE 102" IN HEIGHT MUST HAVE FULL TOP AND BOTTOM RAILS, PATCH FITTINGS ARE NOT RECOMMENDED BECAUSE OF SAFETY CONCERNS.

SET	DOOR HARDWARE SET # 8:
4	BUTT HINGES
1	CYLINDER LOCK – RUSSWIN CL3320 P2D
1	WALL STOP (ROCKWOOD 409)
1	KAWNEER PUSH/PULL SET
1	SURFACE MOUNTED CLOSER

PROJECT:
WORLDWIDE EXPRESS NO TAGS

ADDRESS:
11300 SWITZER ROAD
OVERLAND PARK, KS 66210

MATERIAL SCHEDULE

PRODUCT TYPE	MANUFACTURER	SYSTEM	PROFILE DIMENSIONS	DESCRIPTION	FINISH
TOP CHANNEL	CRL	U–CHANNEL	1" X 1 1/2"	ALUMINUM TOP CHANNEL	CLEAR ANODIZED
BOTTOM CHANNEL	CRL	U–CHANNEL	1" X 1"	ALUMINUM BOTTOM CHANNEL	CLEAR ANODIZED
STOREFRONT DOOR	KAWNEER	WIDE STILE	1–3/4" THICK	10" BOTTOM RAIL	CLEAR ANODIZED
DOOR FRAME	KAWNEER	450 DOOR FRAME	1 3/4" X 4 1/2"	SHEAR BLOCK	CLEAR ANODIZED
CLEAR SILICONE SEALANT AT THE GLASS TO GLASS BUTT JOINTS AND THE GLASS TYP GYP. BOARD JOINTS					

PROJECT NAME & LOCATION:
WORLDWIDE EXPRESS NO TAGS
11300 SWITZER ROAD
OVERLAND PARK, KS 66210

SHEET TITLE:
COVER SHEET

GLASS CONTRACTOR:
BUSINESS NAME
ADDRESS LINE 1
ADDRESS LINE 2
(XXX) XXX–XXXX
(XXX) XXX–XXXX

DRAWING BY:

KS DRAFTING & DESIGN, LLC
KYLE SCHNECK
HARRISBURG, PA 17110
KYLE@KSDRAFTINGDESIGNLLC.COM
(717) 228–7114
KSDRAFTINGDESIGNLLC.COM

ARCHITECT:

DRAWN BY: KEVIN VERGARA
CHECKED BY: KYLE SCHNECK
DATE: 3/6/2020
SHEET: 100

1 THIRD FLOOR PLAN

ARCH. REF.: A1/A1.11

NO.	REVISION/ISSUED	DATE
1	1ST SUBMITTAL	2/18/2020

PROJECT NAME & LOCATION:

WORLDWIDE EXPRESS NO TAGS

11300 SWITZER ROAD

OVERLAND PARK, KS 66210

SHEET TITLE:

THIRD FLOOR PLAN

GLASS CONTRACTOR:

BUSINESS NAME
ADDRESS LINE 1
ADDRESS LINE 2
(XXX) XXX-XXXX
(XXX) XXX-XXXX

DRAWING BY:

KS DRAFTING & DESIGN, LLC
KYLE SCHNECK
HARRISBURG, PA 17110
KYLE@KSDRAFTINGDESIGNLLC.COM
(717) 228-7114
KSDRAFTINGDESIGNLLC.COM

ARCHITECT:

DRAWN BY: KEVIN VERGARA

CHECKED BY: KYLE SCHNECK

DATE: 3/6/2020

SHEET: 200

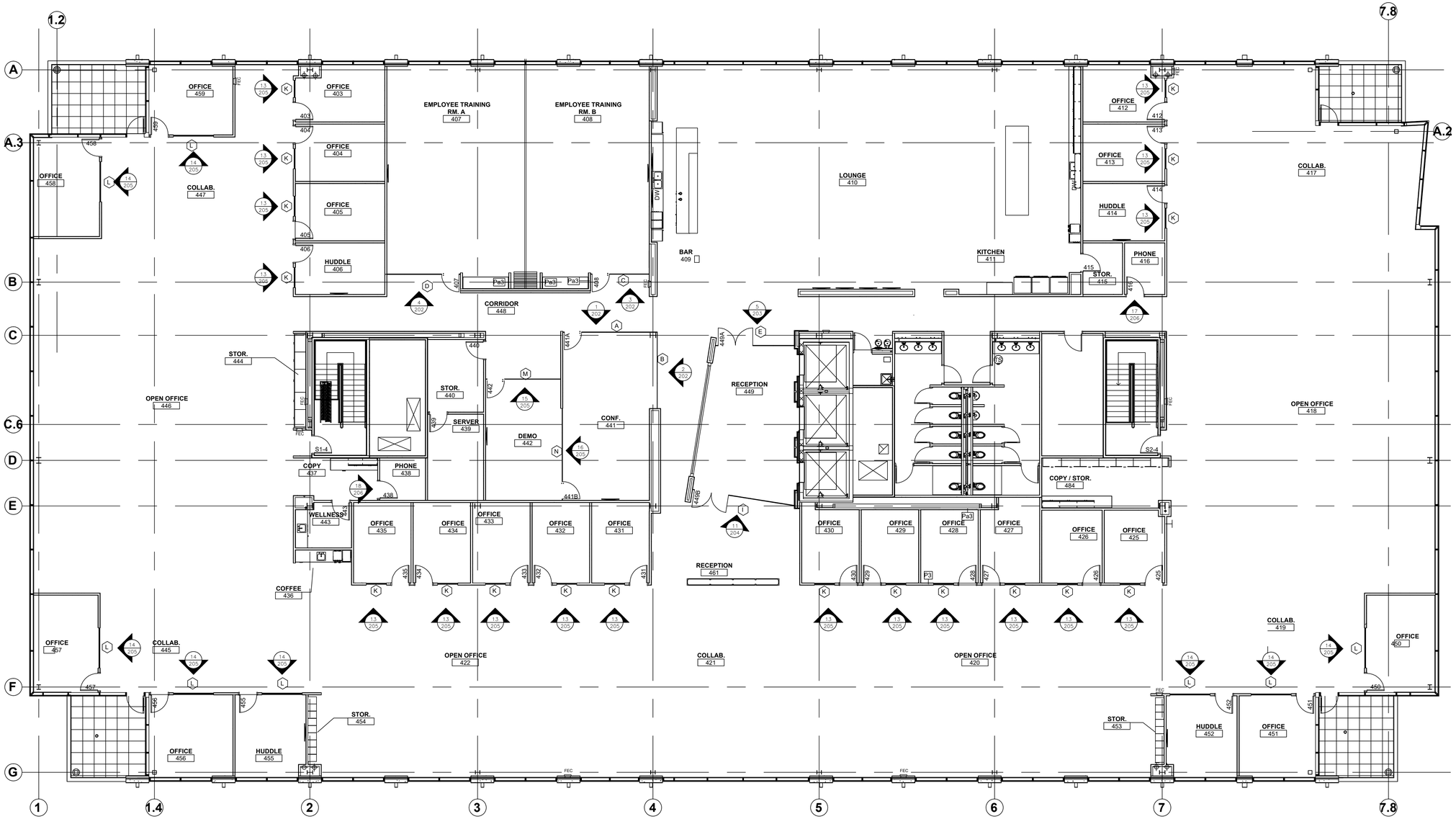

1 FOURTH FLOOR PLAN
ARCH. REF.: A1/A1.12

NO.	REVISION/ISSUED	DATE
1	1ST SUBMITTAL	2/18/2020

PROJECT NAME & LOCATION:
WORLDWIDE EXPRESS NO TAGS
11300 SWITZER ROAD
OVERLAND PARK, KS 66210

SHEET TITLE:
FOURTH FLOOR PLAN

GLASS CONTRACTOR:

BUSINESS NAME
ADDRESS LINE 1
ADDRESS LINE 2
(XXX) XXX-XXXX
(XXX) XXX-XXXX

DRAWING BY:

KS DRAFTING & DESIGN, LLC
KYLE SCHNECK
HARRISBURG, PA 17110
KYLE@KSDRAFTINGDESIGNLLC.COM
(717) 228-7114
KSDRAFTINGDESIGNLLC.COM

ARCHITECT:

DRAWN BY: KEVIN VERGARA
CHECKED BY: KYLE SCHNECK
DATE: 3/6/2020
SHEET: 201

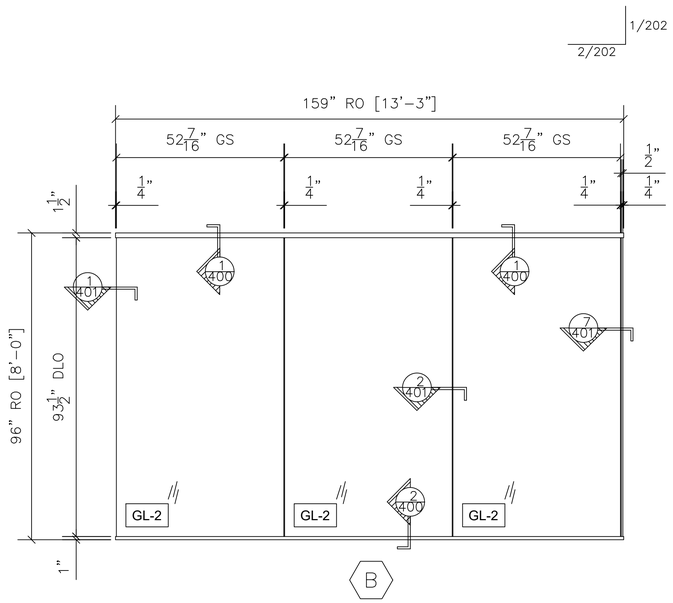

2 GLASS WALL SYSTEM TYPE B ELEVATION

CRL U-CHANNEL 1-1/2" X 1" TOP
1" X 1" BOTTOM CHANNEL
ARCH. REF.: B/A5.12

QTY	LOCATION
1	CONFERENCE 441

1 TOTAL

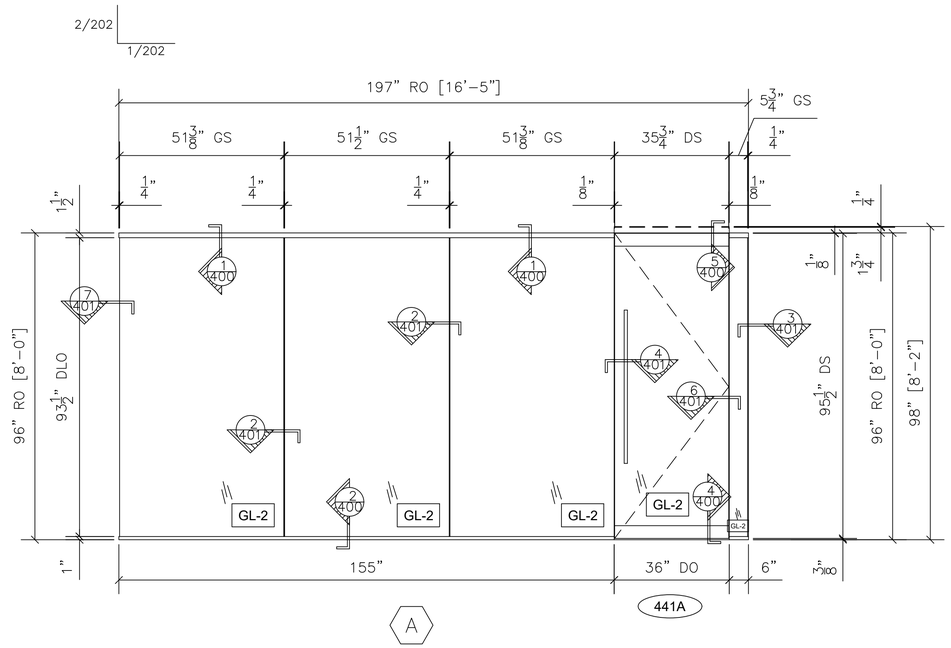

1 GLASS WALL SYSTEM TYPE A ELEVATION

CRL U-CHANNEL 1-1/2" X 1" TOP
1" X 1" BOTTOM CHANNEL
TOP RAIL AND BOTTOM RAIL
ARCH. REF.: A/A5.12

QTY	LOCATION
1	CONFERENCE 441

1 TOTAL

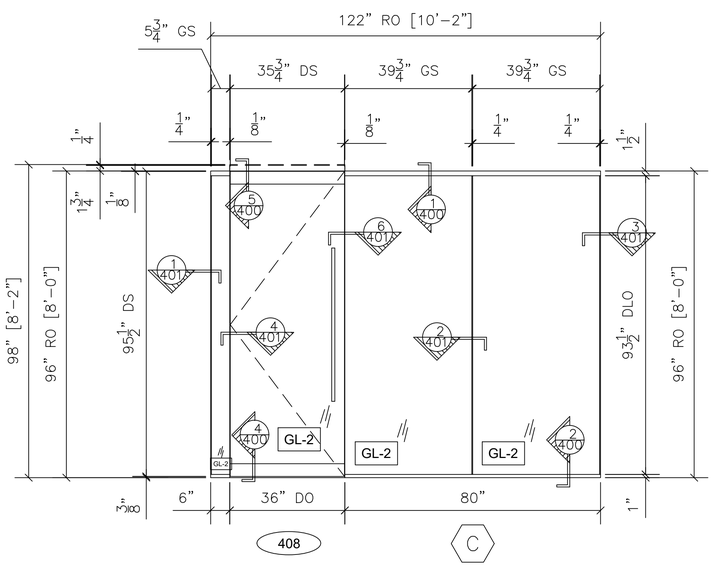

3 GLASS WALL SYSTEM TYPE C ELEVATION

CRL U-CHANNEL 1-1/2" X 1" TOP
1" X 1" BOTTOM CHANNEL
TOP RAIL AND BOTTOM RAIL
ARCH. REF.: C/A5.12

QTY	LOCATION
1	EMPLOYEE TRAINING ROOM B 408

1 TOTAL

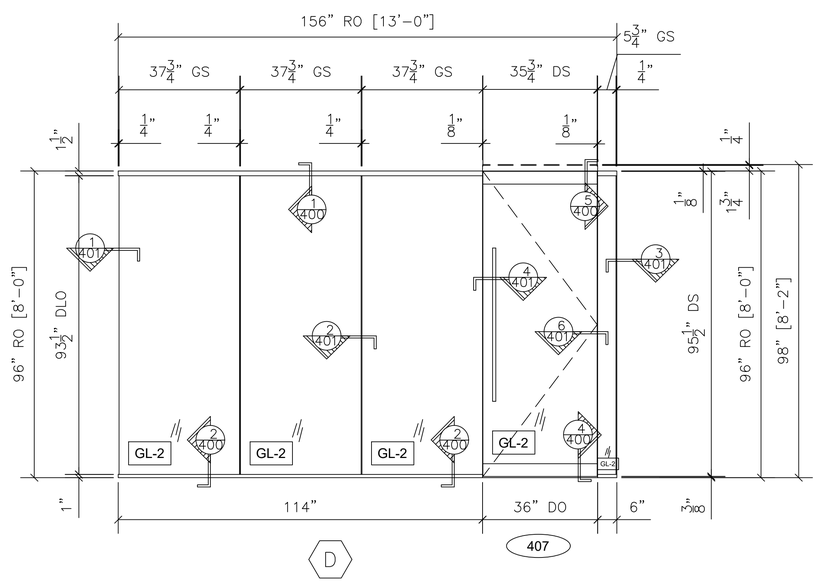

4 GLASS WALL SYSTEM TYPE D ELEVATION

CRL U-CHANNEL 1-1/2" X 1" TOP
1" X 1" BOTTOM CHANNEL
TOP RAIL AND BOTTOM RAIL
ARCH. REF.: D/A5.12

QTY	LOCATION
1	EMPLOYEE TRAINING ROOM A 407

1 TOTAL

NO.	REVISION/ISSUED	DATE
1	1ST SUBMITTAL	2/18/2020

PROJECT NAME & LOCATION:
WORLDWIDE EXPRESS NO TAGS
11300 SWITZER ROAD
OVERLAND PARK, KS 66210

SHEET TITLE:
FRAME ELEVATIONS

GLASS CONTRACTOR:

BUSINESS NAME
ADDRESS LINE 1
ADDRESS LINE 2
(XXX) XXX-XXXX
(XXX) XXX-XXXX

DRAWING BY:

KS DRAFTING & DESIGN, LLC
KYLE SCHNECK
HARRISBURG, PA 17110
KYLE@KSDRAFTINGDESIGNLLC.COM
(717) 228-7114
KSDRAFTINGDESIGNLLC.COM

ARCHITECT:

HOEFER WYSOCKI
11460 TOMAHAWK CREEK PARKWAY, SUITE 400
LEAWOOD, KANSAS 66211
(P): (913) 307-3700
(F): (913) 307-3710

DRAWN BY: KEVIN VERGARA
CHECKED BY: KYLE SCHNECK
DATE: 3/6/2020
SHEET: 202

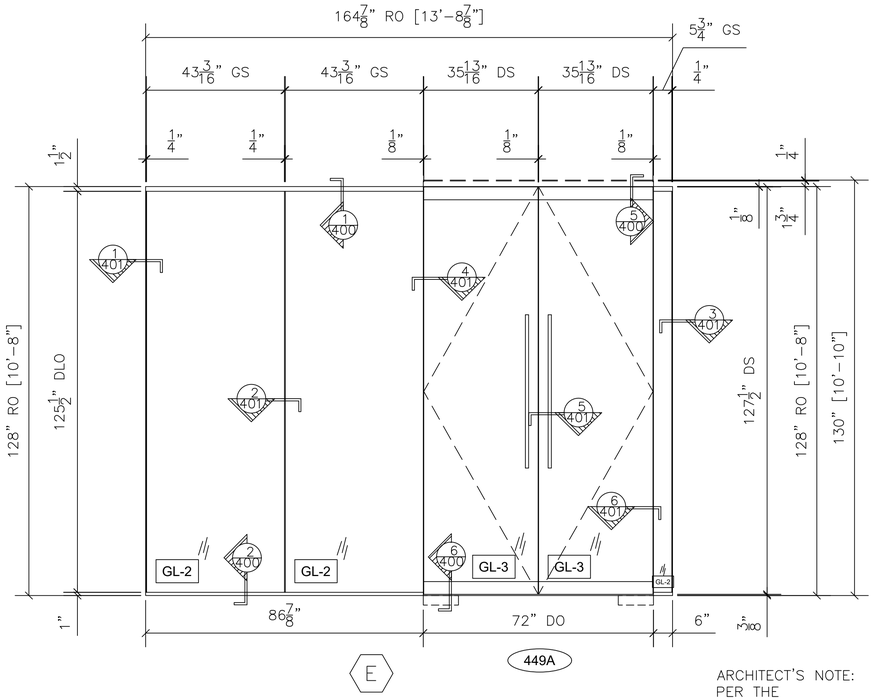

ARCHITECT'S NOTE:
PER THE
MANUFACTURE, ANY DOOR
ABOVE 102" IN HEIGHT
MUST HAVE FULL TOP
AND BOTTOM RAILS,
PATCH FITTINGS ARE NOT
RECOMMENDED BECAUSE
OF SAFETY CONCERNS.

5 GLASS WALL SYSTEM TYPE E ELEVATION

CRL U-CHANNEL 1-1/2" X 1" TOP
1" X 1" BOTTOM CHANNEL
TOP AND BOTTOM RAILS
ARCH. REF.: E/A5.12

QTY	LOCATION
1	RECEPTION 449

1 TOTAL

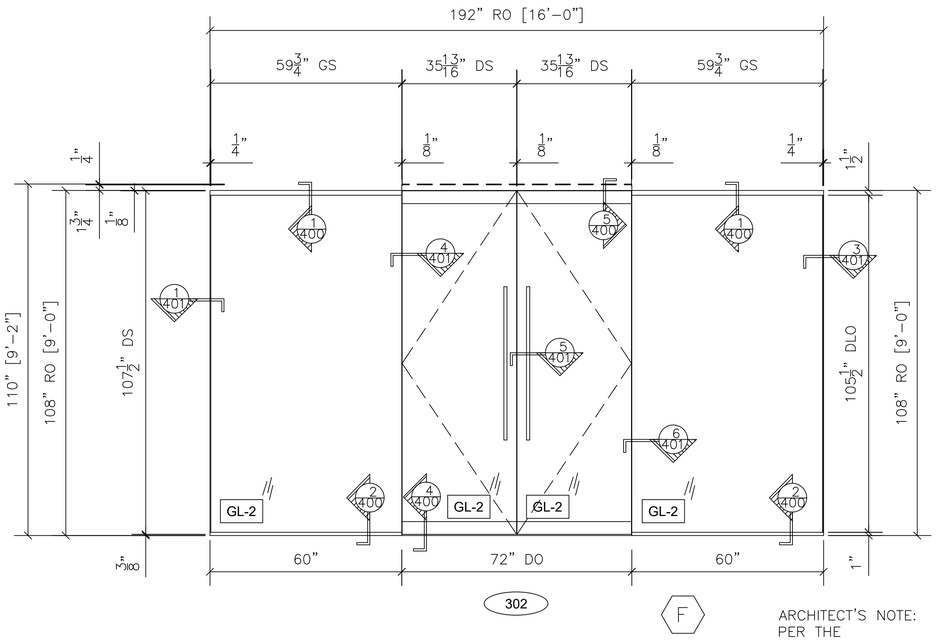

ARCHITECT'S NOTE:
PER THE
MANUFACTURE, ANY DOOR
ABOVE 102" IN HEIGHT
MUST HAVE FULL TOP
AND BOTTOM RAILS,
PATCH FITTINGS ARE NOT
RECOMMENDED BECAUSE
OF SAFETY CONCERNS.

6 GLASS WALL SYSTEM TYPE F ELEVATION

CRL U-CHANNEL 1-1/2" X 1" TOP
1" X 1" BOTTOM CHANNEL
TOP AND BOTTOM RAILS
ARCH. REF.: F/A5.12

QTY	LOCATION
1	CONFERENCE 302

1 TOTAL

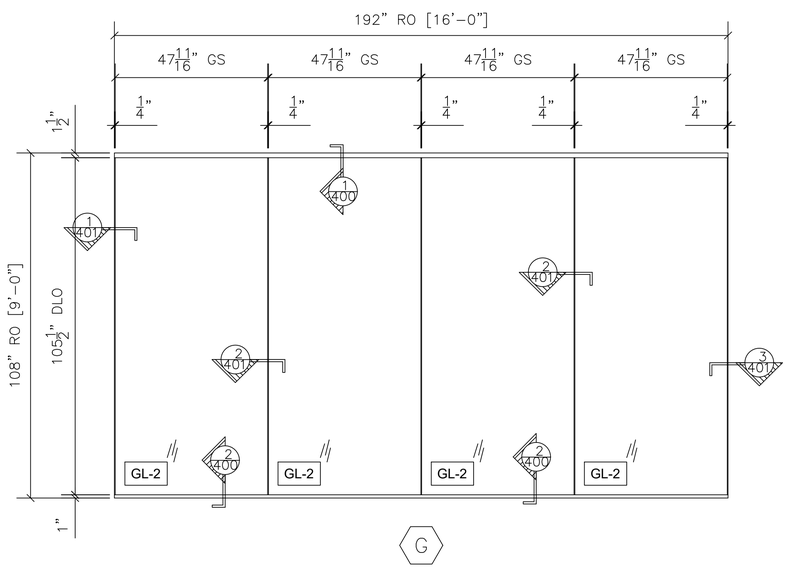

7 GLASS WALL SYSTEM TYPE G ELEVATION

CRL U-CHANNEL 1-1/2" X 1" TOP
1" X 1" BOTTOM CHANNEL
ARCH. REF.: G/A5.12

QTY	LOCATION
1	CONFERENCE 302

1 TOTAL

ARCHITECT'S NOTE:
PER THE
MANUFACTURE, ANY DOOR
ABOVE 102" IN HEIGHT
MUST HAVE FULL TOP
AND BOTTOM RAILS,
PATCH FITTINGS ARE NOT
RECOMMENDED BECAUSE
OF SAFETY CONCERNS.

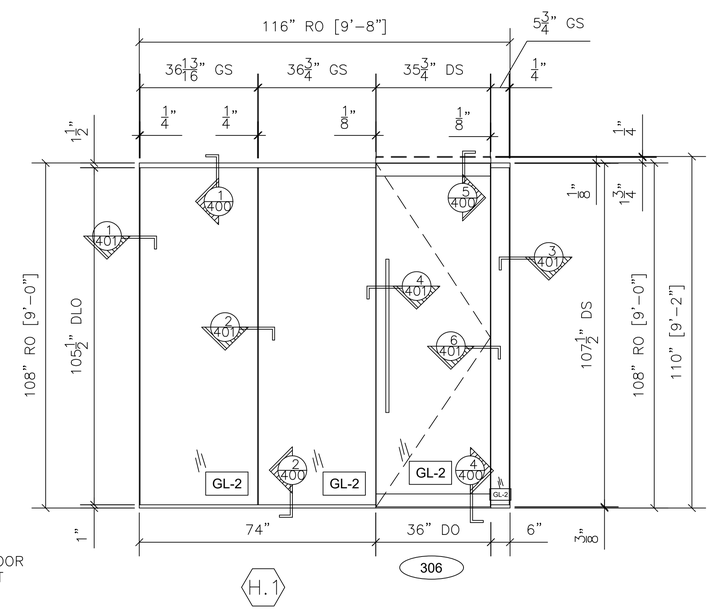

8 GLASS WALL SYSTEM TYPE H.1 ELEVATION

CRL U-CHANNEL 1-1/2" X 1" TOP
1" X 1" BOTTOM CHANNEL
TOP AND BOTTOM RAILS
ARCH. REF.: H/A5.12

QTY	LOCATION
1	HUDDLE 306

1 TOTAL

NO.	REVISION/ISSUED	DATE
1	1ST SUBMITTAL	2/18/2020

PROJECT NAME & LOCATION:
WORLDWIDE EXPRESS NO TAGS
11300 SWITZER ROAD
OVERLAND PARK, KS 66210

SHEET TITLE:
FRAME ELEVATIONS

GLASS CONTRACTOR:

BUSINESS NAME
ADDRESS LINE 1
ADDRESS LINE 2
(XXX) XXX-XXXX
(XXX) XXX-XXXX

DRAWING BY:

KS DRAFTING & DESIGN, LLC
KYLE SCHNECK
HARRISBURG, PA 17110
KYLE@KSDRAFTINGDESIGNLLC.COM
(717) 228-7114
KSDRAFTINGDESIGNLLC.COM

ARCHITECT:

HOEFER WYSOCKI
11460 TOMAHAWK CREEK PARKWAY, SUITE 400
LEAWOOD, KANSAS 66211
(P): (913) 307-3700
(F): (913) 307-3710

DRAWN BY: KEVIN VERGARA
CHECKED BY: KYLE SCHNECK
DATE: 3/6/2020
SHEET: 203

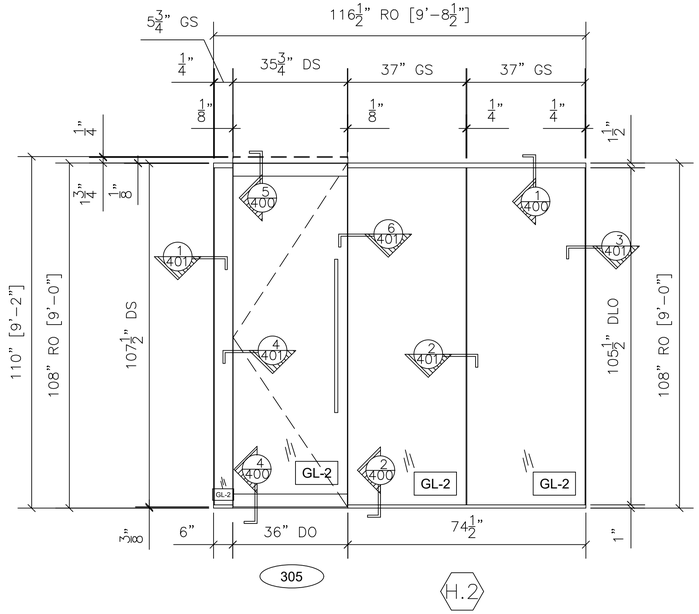

ARCHITECT'S NOTE:
PER THE MANUFACTURE, ANY DOOR ABOVE 102" IN HEIGHT MUST HAVE FULL TOP AND BOTTOM RAILS, PATCH FITTINGS ARE NOT RECOMMENDED BECAUSE OF SAFETY CONCERNS.

9 **GLASS WALL SYSTEM TYPE H.2 ELEVATION**

CRL U-CHANNEL 1-1/2" X 1" TOP
1" X 1" BOTTOM CHANNEL
TOP AND BOTTOM RAILS
ARCH. REF.: H/A5.12

QTY	LOCATION
1	HUDDLE 305

1 TOTAL

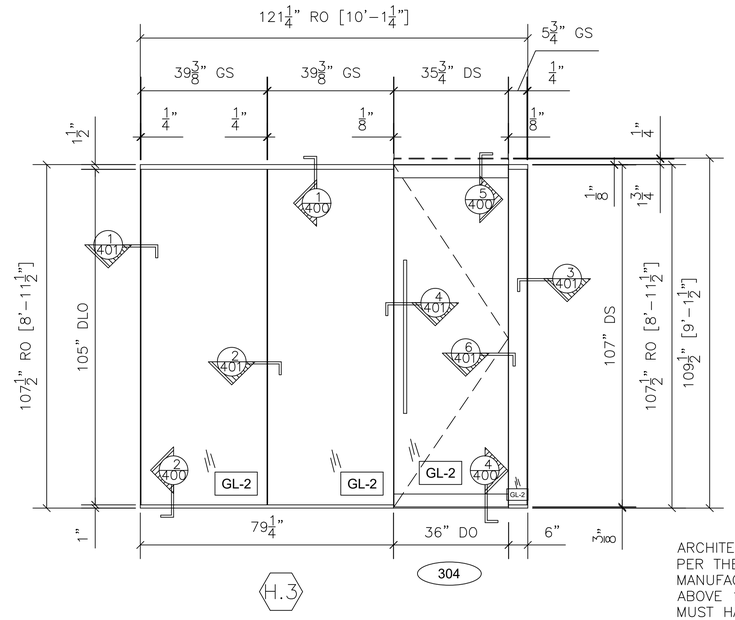

10 **GLASS WALL SYSTEM TYPE H.3 ELEVATION**

CRL U-CHANNEL 1-1/2" X 1" TOP
1" X 1" BOTTOM CHANNEL
TOP AND BOTTOM RAILS
ARCH. REF.: H/A5.12

QTY	LOCATION
1	HUDDLE 304

1 TOTAL

ARCHITECT'S NOTE:
PER THE MANUFACTURE, ANY DOOR ABOVE 102" IN HEIGHT MUST HAVE FULL TOP AND BOTTOM RAILS, PATCH FITTINGS ARE NOT RECOMMENDED BECAUSE OF SAFETY CONCERNS.

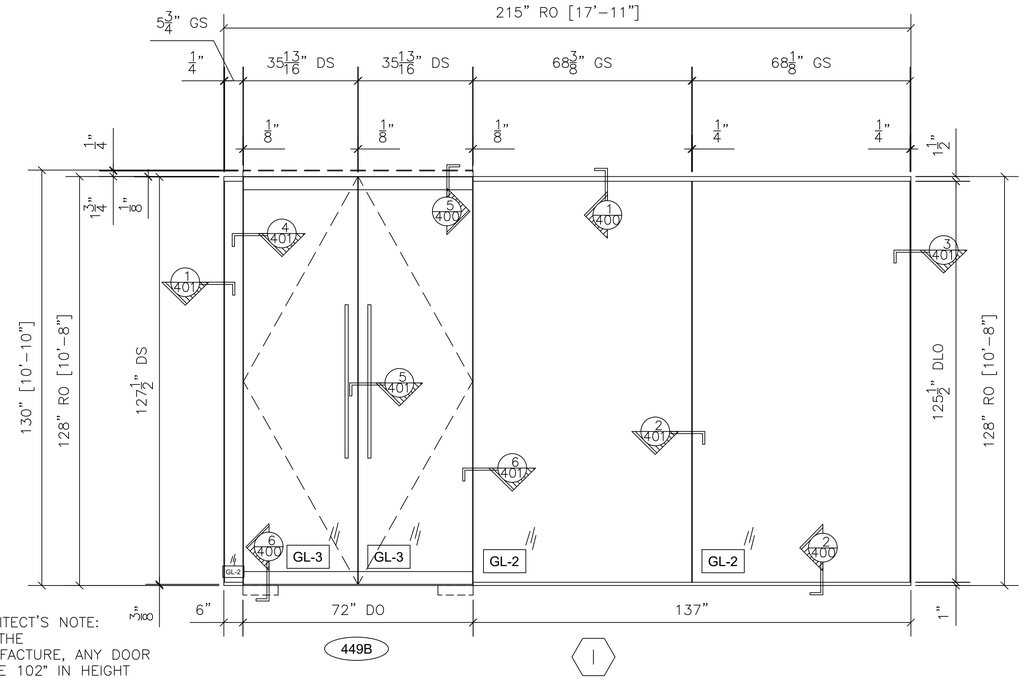

ARCHITECT'S NOTE:
PER THE MANUFACTURE, ANY DOOR ABOVE 102" IN HEIGHT MUST HAVE FULL TOP AND BOTTOM RAILS, PATCH FITTINGS ARE NOT RECOMMENDED BECAUSE OF SAFETY CONCERNS.

11 **GLASS WALL SYSTEM TYPE I ELEVATION**

CRL U-CHANNEL 1-1/2" X 1" TOP
1" X 1" BOTTOM CHANNEL
TOP AND BOTTOM RAILS
ARCH. REF.: I/A5.12

QTY	LOCATION
1	RECEPTION 449

1 TOTAL

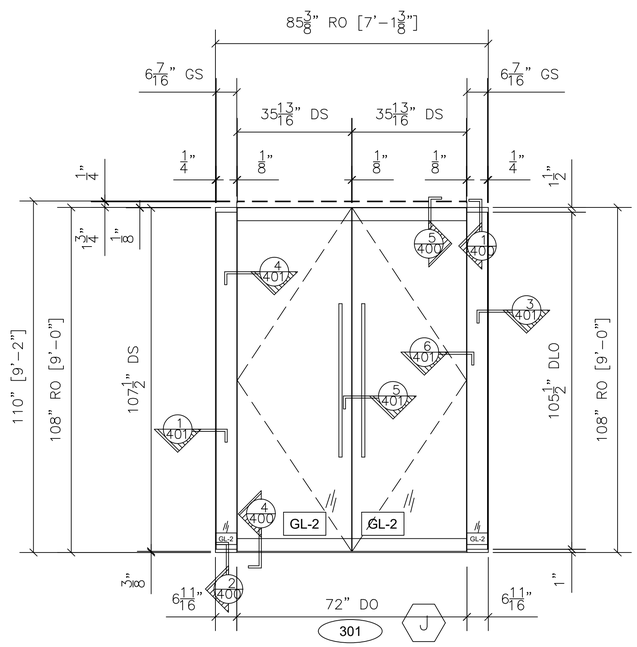

ARCHITECT'S NOTE:
PER THE MANUFACTURE, ANY DOOR ABOVE 102" IN HEIGHT MUST HAVE FULL TOP AND BOTTOM RAILS, PATCH FITTINGS ARE NOT RECOMMENDED BECAUSE OF SAFETY CONCERNS.

12 **GLASS WALL SYSTEM TYPE J ELEVATION**

CRL U-CHANNEL 1-1/2" X 1" TOP
1" X 1" BOTTOM CHANNEL
TOP AND BOTTOM RAILS
ARCH. REF.: J/A5.12

QTY	LOCATION
1	RECEPTION 301

1 TOTAL

NO.	REVISION/ISSUED	DATE
1	1ST SUBMITTAL	2/18/2020

PROJECT NAME & LOCATION:
WORLDWIDE EXPRESS NO TAGS
11300 SWITZER ROAD
OVERLAND PARK, KS 66210

SHEET TITLE:
FRAME ELEVATIONS

GLASS CONTRACTOR:

BUSINESS NAME
ADDRESS LINE 1
ADDRESS LINE 2
(XXX) XXX-XXXX
(XXX) XXX-XXXX

DRAWING BY:

KS DRAFTING & DESIGN, LLC
KYLE SCHNECK
HARRISBURG, PA 17110
KYLE@KSDRAFTINGDESIGNLLC.COM
(717) 228-7114
KSDRAFTINGDESIGNLLC.COM

ARCHITECT:

HOEFER WYSOCKI
11460 TOMAHAWK CREEK PARKWAY, SUITE 400
LEAWOOD, KANSAS 66211
(P): (913) 307-3700
(F): (913) 307-3710

DRAWN BY: KEVIN VERGARA
CHECKED BY: KYLE SCHNECK
DATE: 3/6/2020
SHEET: 204

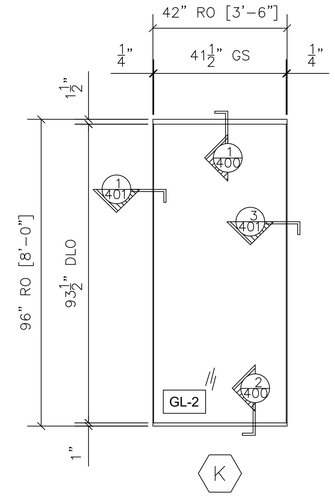

13 GLASS WALL SYSTEM TYPE K ELEVATION

CRL U-CHANNEL 1-1/2" X 1" TOP
1" X 1" BOTTOM CHANNEL
ARCH. REF.: K/A5.12

QTY	LOCATION
1	HUDDLE 317
1	OFFICE 319
1	OFFICE 403
1	OFFICE 404
1	OFFICE 405
1	OFFICE 406
1	OFFICE 431
1	OFFICE 432
1	OFFICE 433
1	OFFICE 434
1	OFFICE 435
1	OFFICE 425
1	OFFICE 426
1	OFFICE 427
1	OFFICE 428
1	OFFICE 429
1	OFFICE 430
1	OFFICE 412
1	OFFICE 413
1	OFFICE 414

20 TOTAL

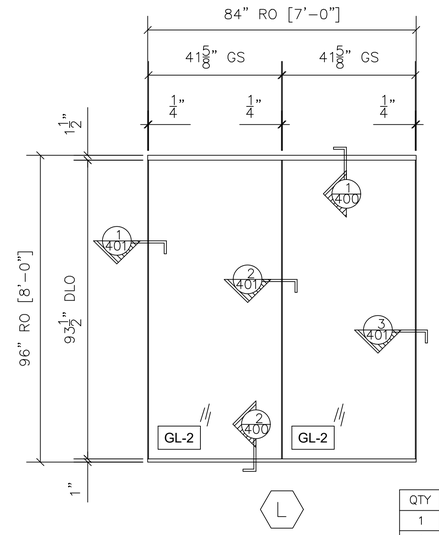

14 GLASS WALL SYSTEM TYPE L ELEVATION

CRL U-CHANNEL 1-1/2" X 1" TOP
1" X 1" BOTTOM CHANNEL
ARCH. REF.: L/A5.12

QTY	LOCATION
1	OFFICE 316
1	OFFICE 318
1	OFFICE 320
1	OFFICE 458
1	OFFICE 459
1	HUDDLE 455
1	OFFICE 456
1	OFFICE 457
1	OFFICE 450
1	OFFICE 451
1	HUDDLE 452

11 TOTAL

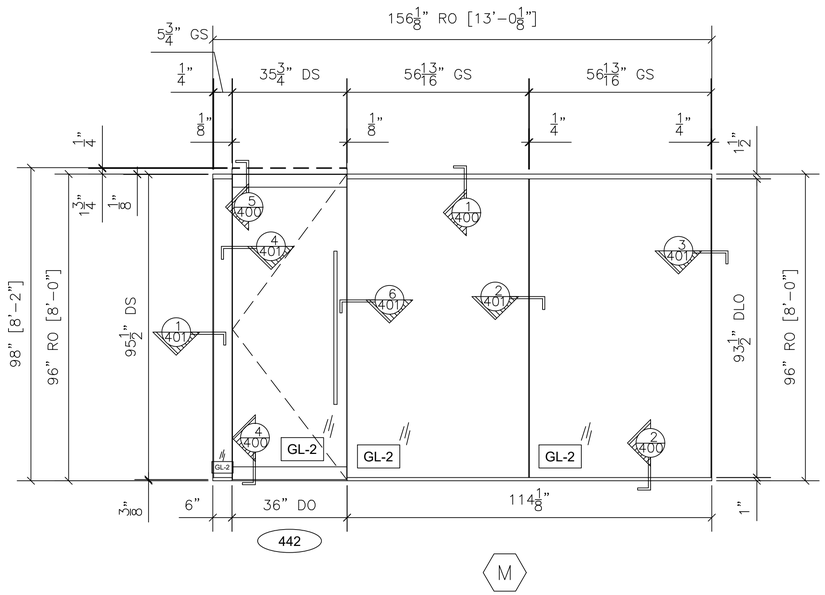

15 GLASS WALL SYSTEM TYPE M ELEVATION

CRL U-CHANNEL 1-1/2" X 1" TOP
1" X 1" BOTTOM CHANNEL
TOP RAIL AND BOTTOM RAIL
ARCH. REF.: M/A5.12

QTY	LOCATION
1	DEMO 442

1 TOTAL

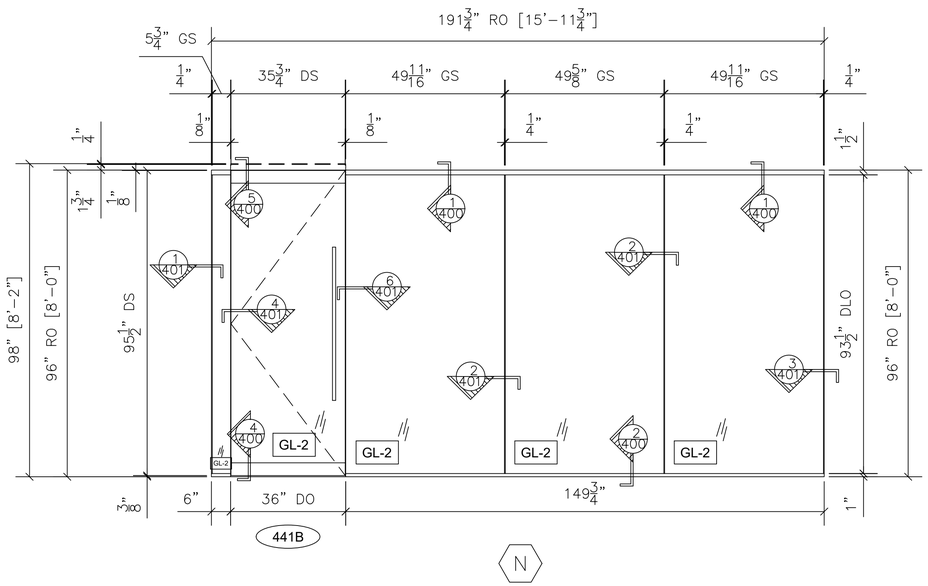

16 GLASS WALL SYSTEM TYPE N ELEVATION

CRL U-CHANNEL 1-1/2" X 1" TOP
1" X 1" BOTTOM CHANNEL
TOP RAIL AND BOTTOM RAIL
ARCH. REF.: N/A5.12

QTY	LOCATION
1	CONFERENCE 441

1 TOTAL

NO.	REVISION/ISSUED	DATE
1	1ST SUBMITTAL	2/18/2020

PROJECT NAME & LOCATION:
WORLDWIDE EXPRESS NO TAGS
11300 SWITZER ROAD
OVERLAND PARK, KS 66210

SHEET TITLE:
FRAME ELEVATIONS

GLASS CONTRACTOR:
BUSINESS NAME
ADDRESS LINE 1
ADDRESS LINE 2
(XXX) XXX-XXXX
(XXX) XXX-XXXX

DRAWING BY:
KS DRAFTING & DESIGN, LLC
KYLE SCHNECK
HARRISBURG, PA 17110
KYLE@KSDRAFTINGDESIGNLLC.COM
(717) 228-7114
KSDRAFTINGDESIGNLLC.COM

ARCHITECT:
HOEFER WYSOCKI
11460 TOMAHAWK CREEK PARKWAY, SUITE 400
LEAWOOD, KANSAS 66211
(P): (913) 307-3700
(F): (913) 307-3710

DRAWN BY: KEVIN VERGARA
CHECKED BY: KYLE SCHNECK
DATE: 3/6/2020
SHEET: 205

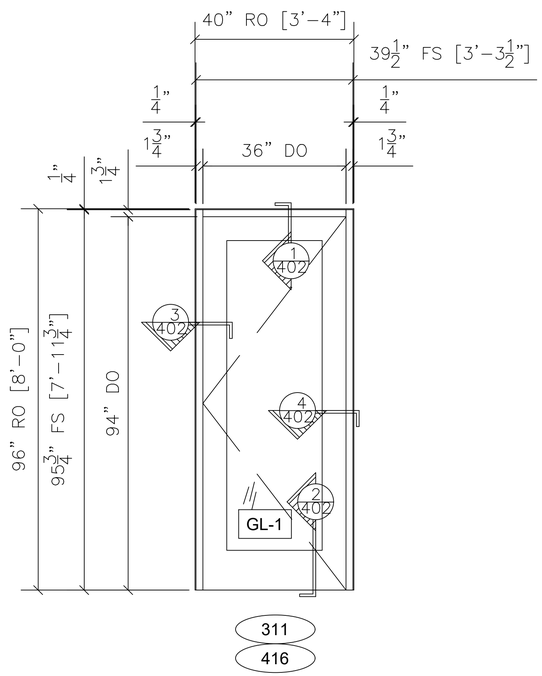

17 DOOR FRAME TYPE GF

KAWNEER WIDE STILE DOOR
450 DOOR FRAME
ARCH. REF.: GF/A5.12

QTY	LOCATION
1	PHONE 311
1	PHONE 416

2 TOTAL

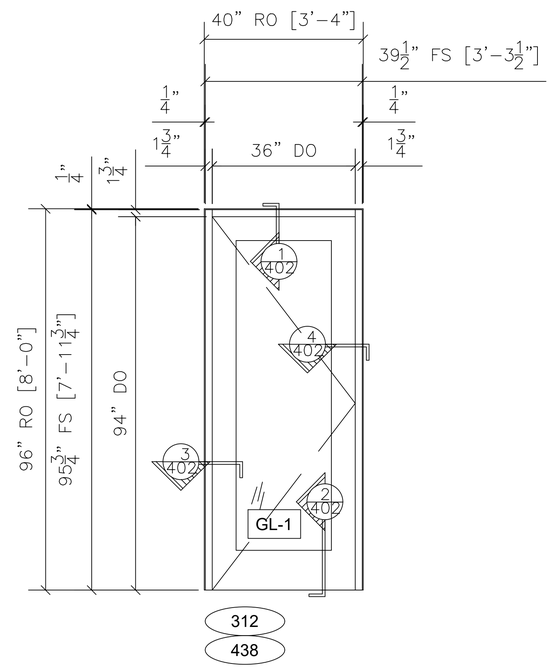

18 DOOR FRAME TYPE GF

KAWNEER WIDE STILE DOOR
450 DOOR FRAME
ARCH. REF.: GF/A5.12

QTY	LOCATION
1	PHONE 312
1	PHONE 438

2 TOTAL

NO.	REVISION/ISSUED	DATE
1	1ST SUBMITTAL	2/18/2020

PROJECT NAME & LOCATION:
WORLDWIDE EXPRESS NO TAGS
11300 SWITZER ROAD
OVERLAND PARK, KS 66210

SHEET TITLE:
FRAME ELEVATIONS

GLASS CONTRACTOR:
BUSINESS NAME
ADDRESS LINE 1
ADDRESS LINE 2
(XXX) XXX-XXXX
(XXX) XXX-XXXX

DRAWING BY:
KS DRAFTING & DESIGN, LLC
KYLE SCHNECK
HARRISBURG, PA 17110
KYLE@KSDRAFTINGDESIGNLLC.COM
(717) 228-7114
KSDRAFTINGDESIGNLLC.COM

ARCHITECT:
HOEFER WYSOCKI
11460 TOMAHAWK CREEK PARKWAY, SUITE 400
LEAWOOD, KANSAS 66211
(P): (913) 307-3700
(F): (913) 307-3710

DRAWN BY: KEVIN VERGARA
CHECKED BY: KYLE SCHNECK
DATE: 3/6/2020
SHEET: 206

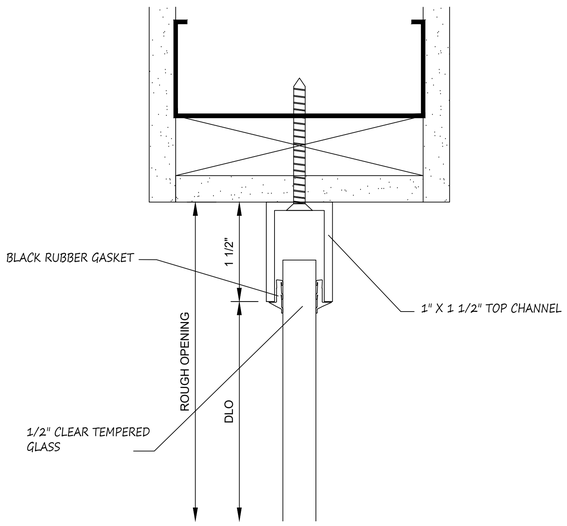

1 SECTION CUT
@ SIDELIGHT HEAD

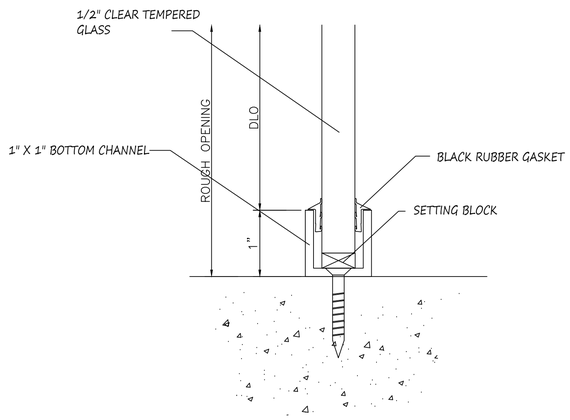

2 SECTION CUT
@ SIDELIGHT SILL

3 NOT USED

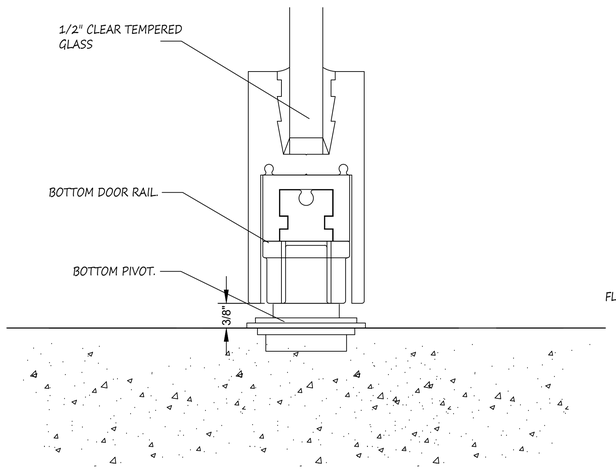

4 SECTION CUT
@ DOOR BOTTOM RAIL

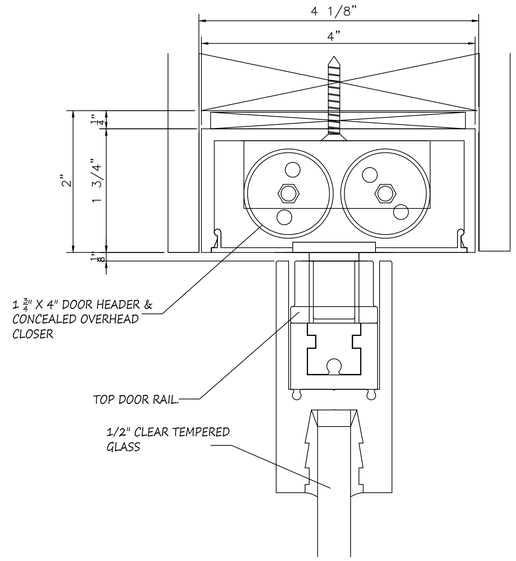

5 SECTION CUT
@ DOOR TOP RAIL

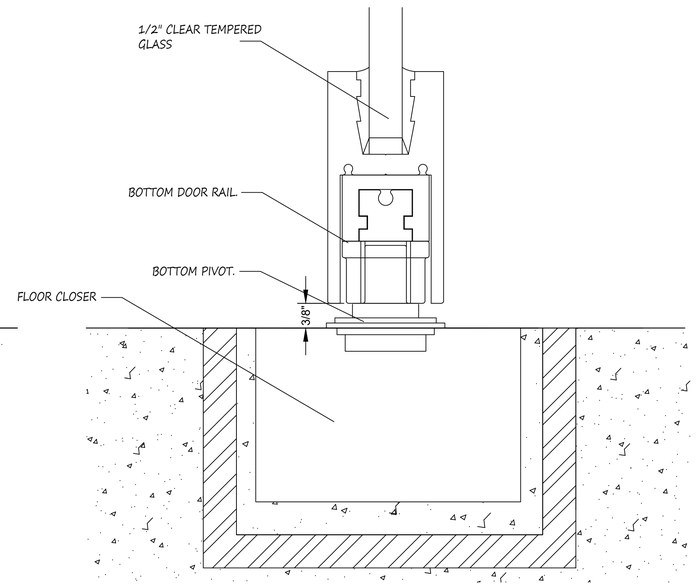

6 SECTION CUT
@ DOOR BOTTOM RAIL

NO.	REVISION/ISSUED	DATE
1	1ST SUBMITTAL	2/18/2020

PROJECT NAME & LOCATION:
WORLDWIDE EXPRESS NO TAGS
11300 SWITZER ROAD
OVERLAND PARK, KS 66210

SHEET TITLE:
DETAILS

GLASS CONTRACTOR:

BUSINESS NAME
ADDRESS LINE 1
ADDRESS LINE 2
(XXX) XXX-XXXX
(XXX) XXX-XXXX

DRAWING BY:

KS DRAFTING & DESIGN, LLC
KYLE SCHNECK
HARRISBURG, PA 17110
KYLE@KSDRAFTINGDESIGNLLC.COM
(717) 228-7114
KSDRAFTINGDESIGNLLC.COM

ARCHITECT:

HOEFER WYSOCKI
11460 TOMAHAWK CREEK PARKWAY, SUITE 400
LEAWOOD, KANSAS 66211
(P): (913) 307-3700
(F): (913) 307-3710

DRAWN BY: KEVIN VERGARA
CHECKED BY: KYLE SCHNECK
DATE: 3/6/2020
SHEET: 400

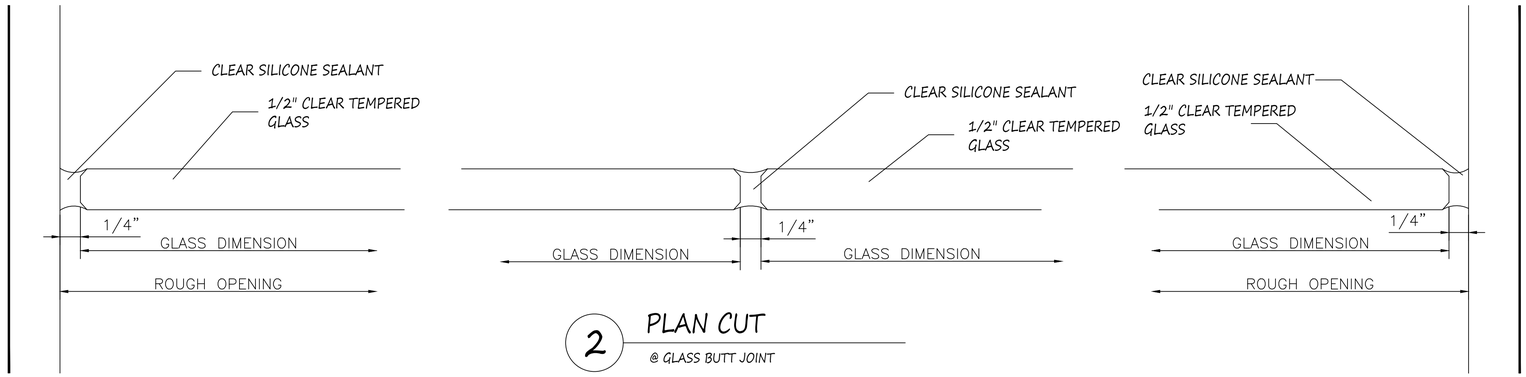

1 PLAN CUT
@ SIDELIGHT LEFT JAMB

2 PLAN CUT
@ GLASS BUTT JOINT

3 PLAN CUT
@ SIDELITE RIGHT JAMB

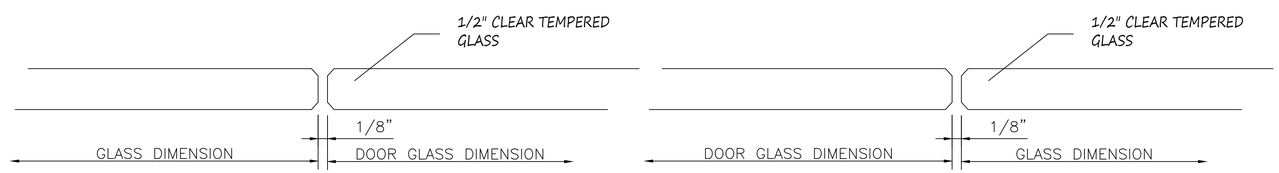

4 PLAN CUT
@ GLASS DOOR LEFT JAMB

6 PLAN CUT
@ GLASS DOOR RIGHT JAMB

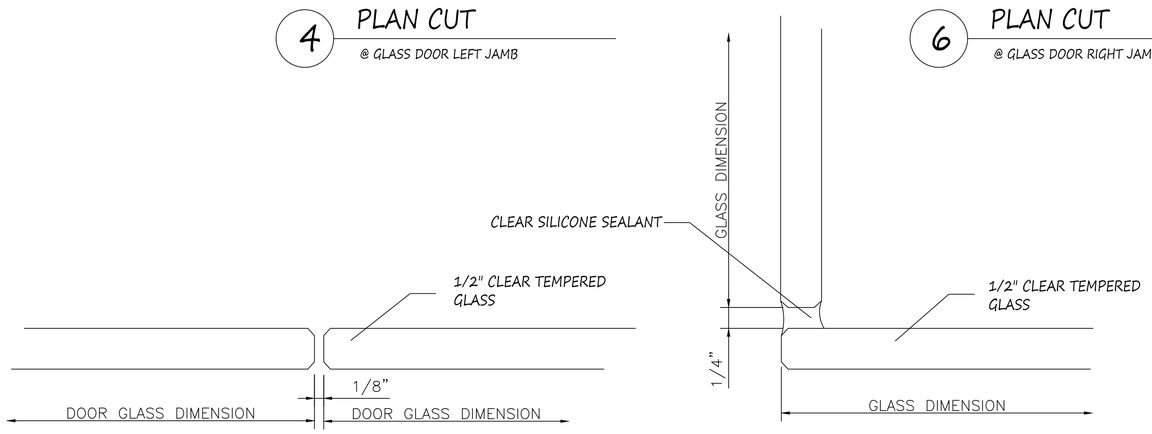

5 PLAN CUT
@ MEETING OF GLASS DOORS

7 PLAN CUT
@ GLASS BUTT JOINT

NO.	REVISION/ISSUED	DATE
1	1ST SUBMITTAL	2/18/2020

PROJECT NAME & LOCATION:
WORLDWIDE EXPRESS NO TAGS
11300 SWITZER ROAD
OVERLAND PARK, KS 66210

SHEET TITLE:
DETAILS

GLASS CONTRACTOR:

BUSINESS NAME
ADDRESS LINE 1
ADDRESS LINE 2
(XXX) XXX-XXXX
(XXX) XXX-XXXX

DRAWING BY:

KS DRAFTING & DESIGN, LLC
KYLE SCHNECK
HARRISBURG, PA 17110
KYLE@KSDRAFTINGDESIGNLLC.COM
(717) 228-7114
KSDRAFTINGDESIGNLLC.COM

ARCHITECT:

HOEFER WYSOCKI
11460 TOMAHAWK CREEK PARKWAY, SUITE 400
LEAWOOD, KANSAS 66211
(P): (913) 307-3700
(F): (913) 307-3710

DRAWN BY: KEVIN VERGARA
CHECKED BY: KYLE SCHNECK
DATE: 3/6/2020
SHEET: 401

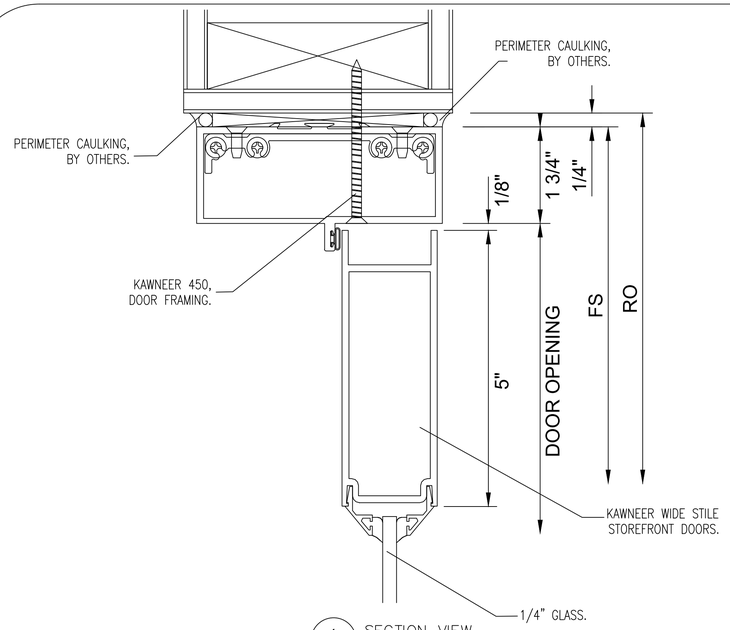

1 SECTION VIEW
@ DOOR TOP RAIL

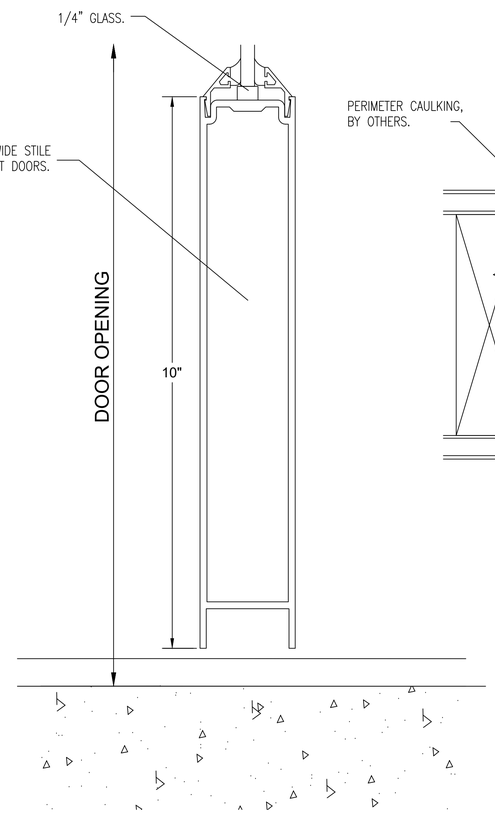

2 SECTION VIEW
@ DOOR BOTTOM RAIL

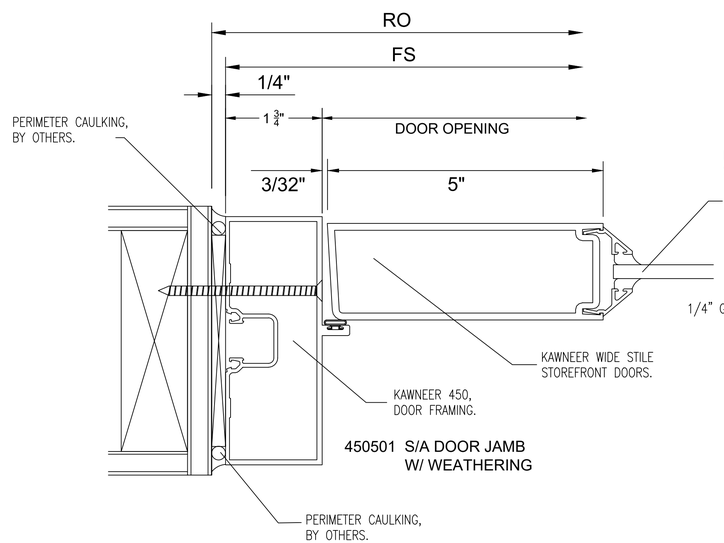

3 PLAN VIEW
@ DOOR JAMB

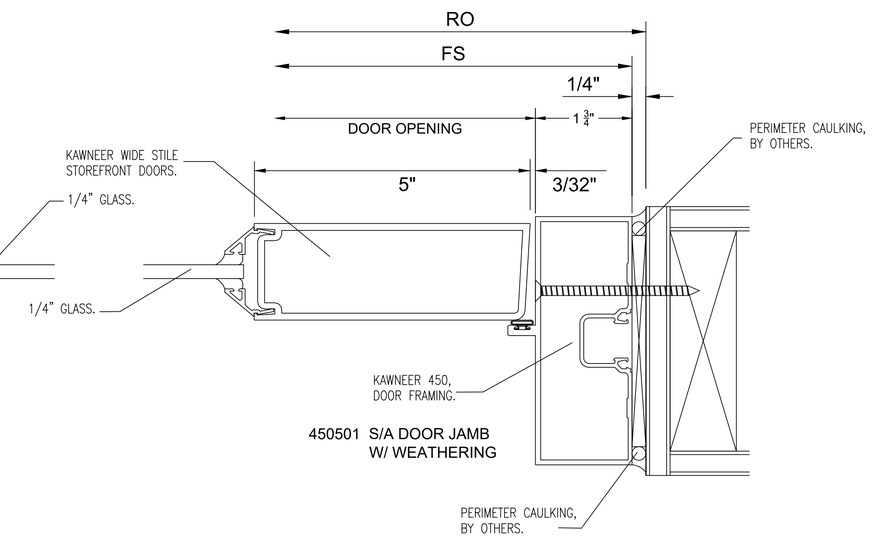

4 PLAN VIEW
@ DOOR JAMB

NO.	REVISION/ISSUED	DATE
1	1ST SUBMITTAL	2/18/2020

PROJECT NAME & LOCATION:
WORLDWIDE EXPRESS NO TAGS
11300 SWITZER ROAD
OVERLAND PARK, KS 66210

SHEET TITLE:
DETAILS

GLASS CONTRACTOR:

BUSINESS NAME
ADDRESS LINE 1
ADDRESS LINE 2
(XXX) XXX-XXXX
(XXX) XXX-XXXX

DRAWING BY:

KS DRAFTING & DESIGN, LLC
KYLE SCHNECK
HARRISBURG, PA 17110
KYLE@KSDRAFTINGDESIGNLLC.COM
(717) 228-7114
KSDRAFTINGDESIGNLLC.COM

ARCHITECT:

HOEFER WYSOCKI
11460 TOMAHAWK CREEK PARKWAY, SUITE 400
LEAWOOD, KANSAS 66211
(P): (913) 307-3700
(F): (913) 307-3710

DRAWN BY: KEVIN VERGARA
CHECKED BY: KYLE SCHNECK
DATE: 3/6/2020
SHEET: 402