INFORMATION AVAILABLE TO PREPARE DRAWINGS

ARCHITECTURAL DRAWINGS DATED 07/29/2019

NOTE TO ARCHITECT

GENERAL NOTES

1.) LIMITATIONS: THESE DRAWINGS REPRESENT AN INTERPRETATION OF ARCHITECTURAL INFORMATION MADE AVAILABLE TO KS DRAFTING & DESIGN, LLC. KS DRAFTING & DESIGN, LLC. MAKES NO REPRESENTATION OR WARRANTY TO THE PERFORMANCE OR COMPLETENESS OF THE ARCHITECTURAL DETAILS OF THE SURROUNDING AREAS.

2.) CONFIRMATION: ANY LISTED TOLERANCES, DIMENSIONS, DEFLECTION, ANCHORAGE, REFERENCES, AND FUNCTIONAL PERFORMANCE REQUIREMENTS SHALL BE CONFIRMED WITH THE ARCHITECT, AND VALIDATED BY FIELD MEASUREMENTS TO ENSURE SIZING, PERFORMANCE COMPLIANCE, AND ARCHITECTURAL INTENT.

3.) ACCEPTANCE: FINAL APPROVAL OF THESE DRAWINGS CONSTITUTES ACCEPTANCE OF ALL DEVIATIONS, IF ANY, AND ALL WORK CONTAINED HEREIN.

4.) USE: KS DRAFTING & DESIGN, LLC. ASSUMES NO RESPONSIBILITY FOR THE USE OF THESE DRAWINGS BY OTHER TRADES.

5.) COMPLIANCE: ARCHITECT, ENGINEER, GENERAL CONTRACTOR, AND MISC. TRADES ARE RESPONSIBLE FOR THE SELECTION, INSTALLATION, AND ADJUSTMENT OF SYSTEMS TO ENSURE COMPLIANCE WITH ALL APPLICABLE DESIGN, ENERGY, RATING, BUILDING, AND/ OR SAFETY CODES.

6.) QUALITY OF CONSTRUCTION: ROUGH OPENINGS MAY NOT BE PLUMB, SQUARE, OR LEVEL. CONTRACTOR TO VERIFY EXISTING OPENINGS.

7.) RELEASE OF LIABILITY: THESE DRAWINGS HAVE BEEN PREPARED BY KS DRAFTING & DESIGN, LLC. FOR USE BY THE CUSTOMER. THE CUSTOMER AGREES TO ASSUME ALL LIABILITY AND ANY CLAIMS THAT MAY ARISE FROM THE USE OF, OR INFORMATION CONTAINED IN THESE DRAWINGS.

NO.	REVISION/ISSUED	DATE
1	1ST SUBMITTAL	02/28/2020

GLASS SCHEDULE

MARK	GLAZING DESCRIPTION AND MAKEUP		NOTES
G-1	DESCRIPTION	1" INSULATED UNIT:	
	OUTBOARD:	3/4" CLEAR, LOW-E ON #2 SURFACE, ANNEALED	
	AIRSPACE:	1/2" AIR SAPCER	
	INBOARD:	3/4" CLEAR, ANNEALED	
G-1T	DESCRIPTION	1" INSULATED UNIT:	
	OUTBOARD:	3/4" CLEAR, LOW-E ON #2 SURFACE, TEMPERED	
	AIRSPACE:	1/2" AIR SPACER	
	INBOARD:	3/4" CLEAR, TEMPERED	
G-2	DESCRIPTION	1" INSULATED SPANDREL UNIT:	
	OUTBOARD:	3/4" CLEAR, LOW-E ON #2 SURFACE, ANNEALED	
	AIRSPACE:	1/2" AIR SPACER	
	INBOARD:	3/4" CLEAR, SPANDREL FRIT ON #4 SURFACE, ANNEALED	
G-3	DESCRIPTION	1" INSULATED UNIT:	
	OUTBOARD:	3/4" CLEAR, LOW-E ON #2 SURFACE, ANNEALED	
	AIRSPACE:	1/2" AIR SPACER	
	INBOARD:	3/4" CLEAR, BLUE FILM ON #4 SURFACE, ANNEALED	
G-3T	DESCRIPTION	1" INSULATED UNIT:	
	OUTBOARD:	3/4" CLEAR, LOW-E ON #2 SURFACE, TEMPERED	
	AIRSPACE:	1/2" AIR SPACER	
	INBOARD:	3/4" CLEAR, BLUE FILM ON #4 SURFACE, TEMPERED	
G-4	DESCRIPTION	1" INSULATED UNIT:	
	OUTBOARD:	3/4" CLEAR, LOW-E ON #2 SURFACE, ANNEALED	
	AIRSPACE:	1/2" AIR SPACER	
	INBOARD:	3/4" CLEAR, PURPLE FILM ON #4 SURFACE, ANNEALED	
G-4T	DESCRIPTION	1" INSULATED UNIT:	
	OUTBOARD:	3/4" CLEAR, LOW-E ON #2 SURFACE, TEMPERED	
	AIRSPACE:	1/2" AIR SPACER	
	INBOARD:	3/4" CLEAR, PURPLE FILM ON #4 SURFACE, TEMPERED	
G-5	DESCRIPTION	1" INSULATED UNIT:	
	OUTBOARD:	3/4" CLEAR, LOW-E ON #2 SURFACE, ANNEALED	
	AIRSPACE:	1/2" AIR SPACER	
	INBOARD:	3/4" CLEAR, YELLOW FILM ON #4 SURFACE, ANNEALED	
G-5T	DESCRIPTION	1" INSULATED UNIT:	
	OUTBOARD:	3/4" CLEAR, LOW-E ON #2 SURFACE, TEMPERED	
	AIRSPACE:	1/2" AIR SPACER	
	INBOARD:	3/4" CLEAR, YELLOW FILM ON #4 SURFACE, TEMPERED	
G-6	DESCRIPTION	1" INSULATED UNIT:	
	OUTBOARD:	3/4" CLEAR, LOW-E ON #2 SURFACE, ANNEALED	
	AIRSPACE:	1/2" AIR SPACER	
	INBOARD:	3/4" CLEAR, GREEN FILM ON #4 SURFACE, ANNEALED	
G-6T	DESCRIPTION	1" INSULATED UNIT:	
	OUTBOARD:	3/4" CLEAR, LOW-E ON 32 SURFACE, TEMPERED	
	AIRSPACE:	1/2" AIR SPACER	
	INBOARD:	3/4" CLEAR, GREEN FILM ON #4 SURFACE, TEMPERED	
G-7	DESCRIPTION	3/4" CLEAR, ANNEALED	
G-7T	DESCRIPTION	3/4" CLEAR, TEMPERED	

PROJECT TITLE:

A. MARIO LOIEDERMAN MIDDLE SCHOOL PERFORMING ARTS ADDITION

ADDRESS:

12701 GOODHILL RD
SILVER SPRING, MD 20906

MATERIAL SCHEDULE

PRODUCT TYPE	MANUFACTURER	SYSTEM	PROFILE DIMENSIONS	DESCRIPTION	FINISH
CURTAINWALL	OLDCASTLE	RELIANCE	2-1/2" X 6"	CAPTURED, SHEAR BLOCK	2CPT-70% CUSTOM 2-COAT
CURTAINWALL	OLDCASTLE	RELIANCE	2-1/2" X 7-1/4"	CAPTURED, SHEAR BLOCK	2CPT-70% CUSTOM 2-COAT
EXTERIOR STOREFRONT	OLDCASTLE	FG-3000 XT	2" X 4-1/2"	THERMAL, CENTER SET, OUTSIDE GLAZED, SCREW SPLINE	2CPT-70% CUSTOM 2-COAT
INTERIOR STOREFRONT	OLDCASTLE	FG-2000	1-3/4" X 4-1/2"	NON-THERMAL, CENTER SET, OUTSIDE GLAZED, SCREW SPLINE	2CPT-70% CUSTOM 2-COAT
STOREFRONT DOORS	OLDCASTLE	THERMAL WIDE STILE	2-1/4" THICK	10" BOTTOM RAIL, 5" STILES, 5" TOP-RAIL, 10" MID RAIL	2CPT-70% CUSTOM 2-COAT
SUNSHADES	OLDCASTLE	SOLAR ECLIPSE	6" X 30"	RECTANGLE SOLAR ECLIPSE W/ (5) 6" SS-108 AIR FOIL BLADES & (1) 3"X5" SS101 RECTANGULAR FASCIA	2CPT-70% CUSTOM 2-COAT
VERTICAL FINS	OLD CASTLE	–	–	–	2CPT-70% CUSTOM 2-COAT
CAULKING AT THE EXTERIOR PERIMETER OF THE ALUMINUM FRAMES					
BRAKE METAL WHERE SHOWN ON FRAME ELEVATIONS & DETAILS; FINISH TO MATCH ALUMINUM FRAMES					

SHEET LIST

SHEET	DESCRIPTION
100	COVER SHEET
101	DOOR & HARDWARE SCHEDULES
200	FLOOR PLANS
201	FLOOR PLAN
202	BUILDING ELEVATION
203	BUILDING ELEVATION
204	BUILDING ELEVATIONS
205	FRAME ELEVATIONS
206	FRAME ELEVATIONS
207	FRAME ELEVATIONS
208	FRAME ELEVATIONS
209	FRAME ELEVATIONS
210	FRAME ELEVATIONS
211	FRAME ELEVATIONS
212	FRAME ELEVATIONS
213	FRAME ELEVATIONS
400	DETAILS
401	DETAILS
402	DETAILS
403	DETAILS
404	DETAILS
405	DETAILS
406	DETAILS
407	DETAILS
408	DETAILS
409	DETAILS
410	DETAILS
411	DETAILS

PROJECT NAME & LOCATION:

A. MARIO LOIEDERMAN MIDDLE SCHOOL
PERFORMING ARTS ADDITION

12701 GOODHILL RD
SILVER SPRING, MD 20906

SHEET TITLE:

COVER SHEET

DRAFTSMAN:

KS DRAFTING & DESIGN, LLC.
KYLE SCHNECK
HARRISBURG, PA 17111
KYLE@KSDRAFTINGDESIGNLLC.COM
717-228-7114
KSDRAFTINGDESIGNLLC.COM

ARCHITECT:

GLAZING CONTRACTOR:

DRAWN BY: JAMES LUPICA

CHECKED BY: KYLE SCHNECK

DATE: 02/28/2020

SHEET: 100

DOOR SCHEDULE

DOOR #	DOOR WIDTH	DOOR HEIGHT	ACTIVE LEAF	TYPE	HARDWARE
P03A	6'–0'	7'–0"	OUTSWING	PAIR	154
P03B	6'–0"	7'–0"	OUTSWING	PAIR	12
P03C	6'–0"	7'–0"	OUTSWING	PAIR	167
P03D	6'–0"	7'–0"	OUTSWING	PAIR	32

HARDWARE SETS

HARDWARE SET 12

QTY	DESCRIPTION	PRODUCT	FINISH	MANUFACTURER
2	HINGE – CONTINUOUS	112XY X 83"	US28	IVES
1	REMOVABLE MULLION	KR4954 X 7–6 X 154	SP28	VON DUPRIN
2	CYLINDER – MORTISE	20–061 X 112 X ICX X 50–231	626	SCHLAGE
3	EXIT DEVICE – RIM	CDSI–XP98EO X 909 X 3–0	NONE/US26D–AM	VON DUPRIN
2	ANTI–VANDAL PULL	1097HA X NC X SP	630	TRIMCO
2	CLOSER – PARALLEL ARM	4111 X SCUSH X WMS X 4110–18CUSH X 4110–30 X 4110–61	AL	LCN
2	KICK PLATE	8400 8 X 35 X B–CS	US32D	IVES
1	WEATHERSTRIP	137SA X 36" X 84"	A	NGPFULL
1	DOOR SEAL	5100N–86	BLACK	NGPFULL
2	SWEEP	101V X 36"	MILL	NGPFULL
1	THRESHOLD	896SS X SIA X SPANNER 10–24 SSMS/LA X 36"	SS	BGPFULL

DHSI GASKETING BY OTHERS

HARDWARE SET 32

QTY	DESCRIPTION	PRODUCT	FINISH	MANUFACTURER
2	HINGE – CONTINUOUS	112XY X 83"	US28	IVES
2	PUSH BAR	350 X 36"	US26D–AM	VON DUPRIN
2	ANTI–VANDAL PULL	1097HA X NC X SP	630	TRIMCO
2	CLOSER – PARALLEL ARM	411 X SCHUSH X DEL X WMS X 4110–18CUSH X 4110–30 X 4110–61	AL	LCN
2	KICK PLATE	8400 8 X 34 X B–CS	US32D	IVES
2	FLOOR STOP	FS441	US26D	IVES

PERMANENT CORE BY OTHERS

HARDWARE SET 154

QTY	DESCRIPTION	PRODUCT	FINISH	MANUFACTURER
1	HINGE – CONTINUOUS	112XY X 83"	US28	IVES
1	HINGE – ELECTRIC	112XY X 83" X EPT	US28	IVES
1	REMOVABLE MULLION	KR4954 X 7–6 X 154	SP28	VON DUPRIN
3	CYLINDER – MORTISE	20–061 X 112 X ICX X 50–231	626	SCHLAGE
1	CYLINDER – RIM	20–057 X ICX X 50–231	626	SCHLAGE
1	EXIT DEVICE – RIM	CDSI–XP98EO X 909 X 3–0	NONE/US26D–AM	VON DUPRIN
1	EXIT DEVICE – RIM	SD–QEL–XP98NL–OP X 110MD–NL X 909 X 3–0 X CON	US26D/US26D–AM	VON DUPRIN
1	ANTI–VANDAL PULL	1097HA X FC X SP	630	TRIMCO
1	ANTI–VANDAL PULL	1097HA X NC X SP	630	TRIMCO
1	CLOSER – PARALLEL ARM	4111 X SHCUSH X WMS X 4110–18CUSH X 4110–30 X 4110–61	AL	LCN
1	CLOSER – AUTOMATIC OPERATOR	9542 X REG (PUSH) X 72 HDR LENGTH X DD X MS	ANCLR	LCN
2	KICK PLATE	8400 8 X 35 X B–CS	US32D	IVES
2	WALL STOP	WS406/407–CCV	US26D	IVES
1	WEATHERSTRIP	137SA X 36" X 84"	A	NGPFULL
1	DOOR SEAL	5100N–86	BLACK	NGPFULL
2	SWEEP	C627A X 36"	A	NGPFULL
1	THRESHOLD	896SS X SIA X SPANNER 10–24 SSMS/LA X 36"	SS	NGPFULL
2	ACTUATOR	8310 – 853T	N/A	LCN
1	WIRING HARNESS	CON–12	–	VON DUPRIN
1	WIRING HARNESS	CON–192P	–	VON DUPRIN
1	ELECTRIC POWER TRANSFER	EPT 2	SP28	VON DUPRIN
1	POWER SUPPLY	PS904 X 900–2RS X 90–BBK	–	VON DUPRIN

CARD READER BY OTHERS

DHSI GASKETING BY OTHERS

MONITOR RELAY IS UNNECESSARY WITH THE 2RS BOARD ON THE POWER SUPPLY. PLEASE VERIFY.

1	WIRING DIAGRAM	WD–P2P	–	OTHER

HARDWARE SET 167

QTY	DESCRIPTION	PRODUCT	FINISH	MANUFACTURER
2	HINGE – CONTINUOUS	112XY X 83"	US28	IVES
2	PUSH BAR	350 X 36"	US26D–AM	VON DUPRIN
2	ANTI–VANDAL PULL	1097HA X NC X SP	630	TRIMCO
1	CLOSER – PARALLEL ARM	4111 X SHCUSH X WMS X 4110–18CUSH X 4110–30 X 4110–61	AL	LCN
1	CLOSER – AUTOMATIC OPERATOR	9542 X REG (PUSH) X 72 HDR LENGTH X MS	ANCLR	LCN
2	KICK PLATE	8400 8 X 34 X B–CS	US32D	IVES
2	ACTUATOR	8310 – 853T	N/A	LCN

SILENCERS BY OTHERS

1	WIRING DIAGRAM	WD–P2P	–	OTHER

NO.	REVISION/ISSUED	DATE
1	1ST SUBMITTAL	02/28/2020

PROJECT NAME & LOCATION:

A. MARIO LOIEDERMAN MIDDLE SCHOOL
PERFORMING ARTS ADDITION

12701 GOODHILL RD
SILVER SPRING, MD 20906

SHEET TITLE:

DOOR & HARDWARE SCHEDULES

DRAFTSMAN:

KS DRAFTING & DESIGN, LLC.
KYLE SCHNECK
HARRISBURG, PA 17111
KYLE@KSDRAFTINGDESIGNLLC.COM
717–228–7114
KSDRAFTINGDESIGNLLC.COM

ARCHITECT:

GLAZING CONTRACTOR:

DRAWN BY: JAMES LUPICA

CHECKED BY: KYLE SCHNECK

DATE: 02/28/2020

SHEET: 101

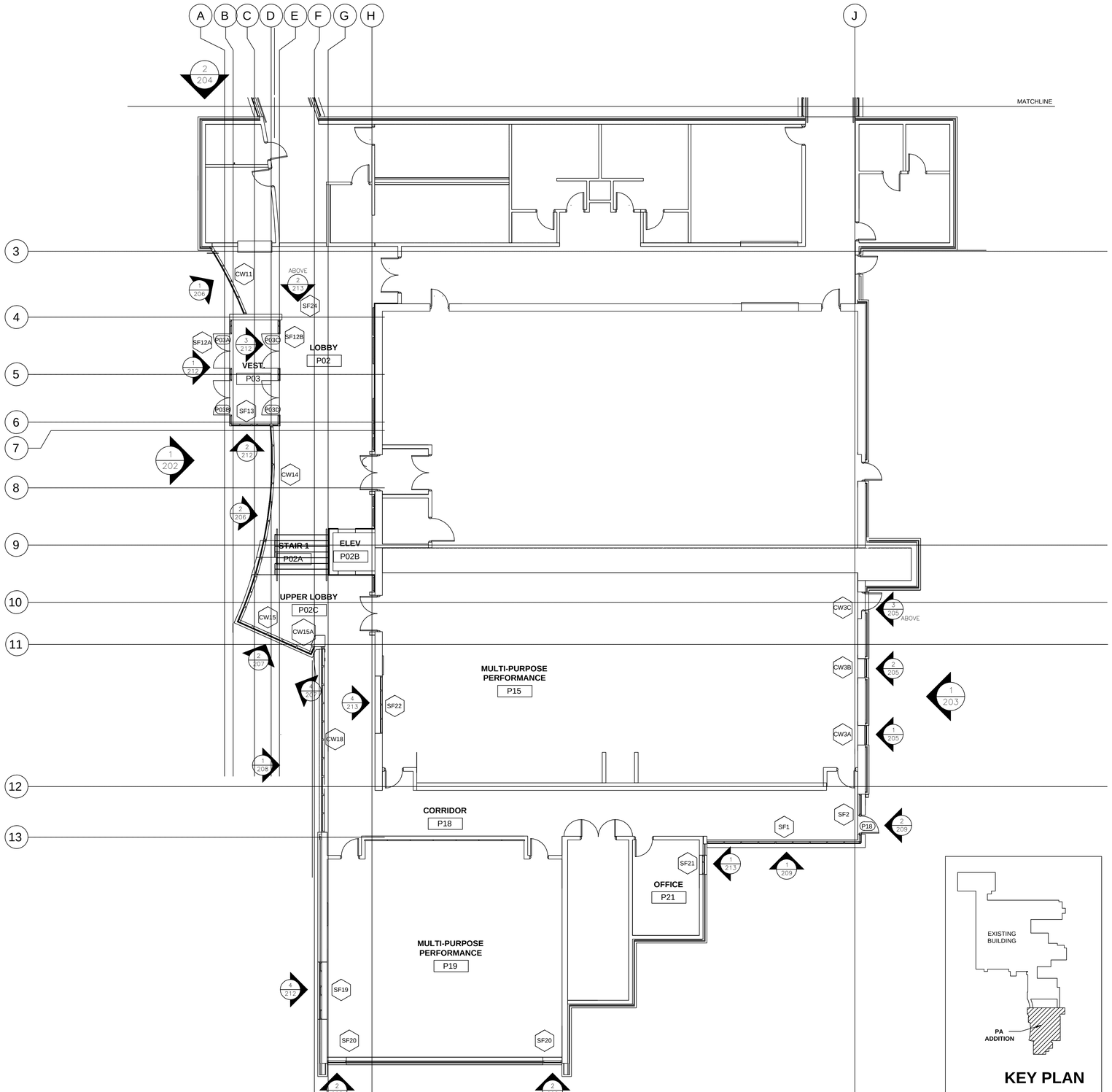

1 FLOOR PLAN - PA ADDITION
ARCH. REF.: 1/A101

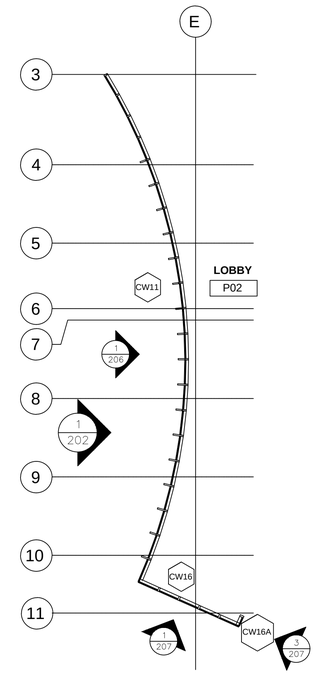

2 LOBBY CURTAINWALL LAYOUT PLAN
ARCH. REF.: 8J/A101

KEY PLAN

NO.	REVISION/ISSUED	DATE
1	1ST SUBMITTAL	02/28/2020

PROJECT NAME & LOCATION:

A. MARIO LOIEDERMAN MIDDLE SCHOOL
PERFORMING ARTS ADDITION
12701 GOODHILL RD
SILVER SPRING, MD 20906

SHEET TITLE:

FLOOR PLANS

DRAFTSMAN:

KS DRAFTING & DESIGN, LLC.
KYLE SCHNECK
HARRISBURG, PA 17111
KYLE@KSDRAFTINGDESIGNLLC.COM
717-228-7114
KSDRAFTINGDESIGNLLC.COM

ARCHITECT:

GLAZING CONTRACTOR:

DRAWN BY: JAMES LUPICA

CHECKED BY: KYLE SCHNECK

DATE: 02/28/2020

SHEET: 200

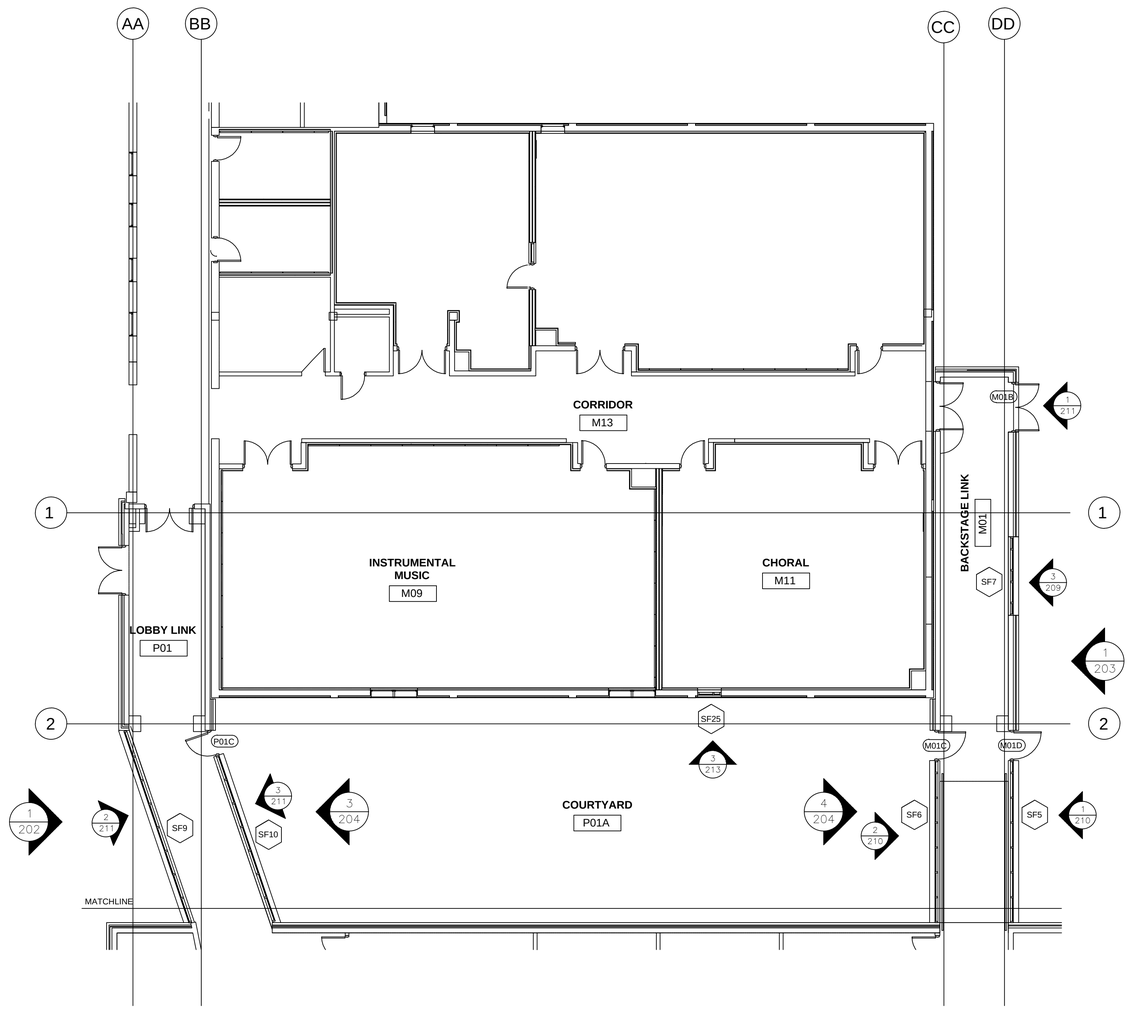

1 FLOOR PLAN - MUSIC WING (ALT 1)
ARCH. REF.: 9A/A104

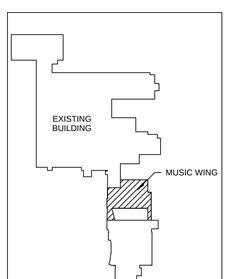

KEY PLAN

NO.	REVISION/ISSUED	DATE
1	1ST SUBMITTAL	02/28/2020

PROJECT NAME & LOCATION:

A. MARIO LOIEDERMAN MIDDLE SCHOOL
PERFORMING ARTS ADDITION

12701 GOODHILL RD
SILVER SPRING, MD 20906

SHEET TITLE:

FLOOR PLAN

DRAFTSMAN:

KS DRAFTING & DESIGN, LLC.
KYLE SCHNECK
HARRISBURG, PA 17111
KYLE@KSDRAFTINGDESIGNLLC.COM
717-228-7114
KSDRAFTINGDESIGNLLC.COM

ARCHITECT:

GLAZING CONTRACTOR:

DRAWN BY: JAMES LUPICA

CHECKED BY: KYLE SCHNECK

DATE: 02/28/2020

SHEET: 201

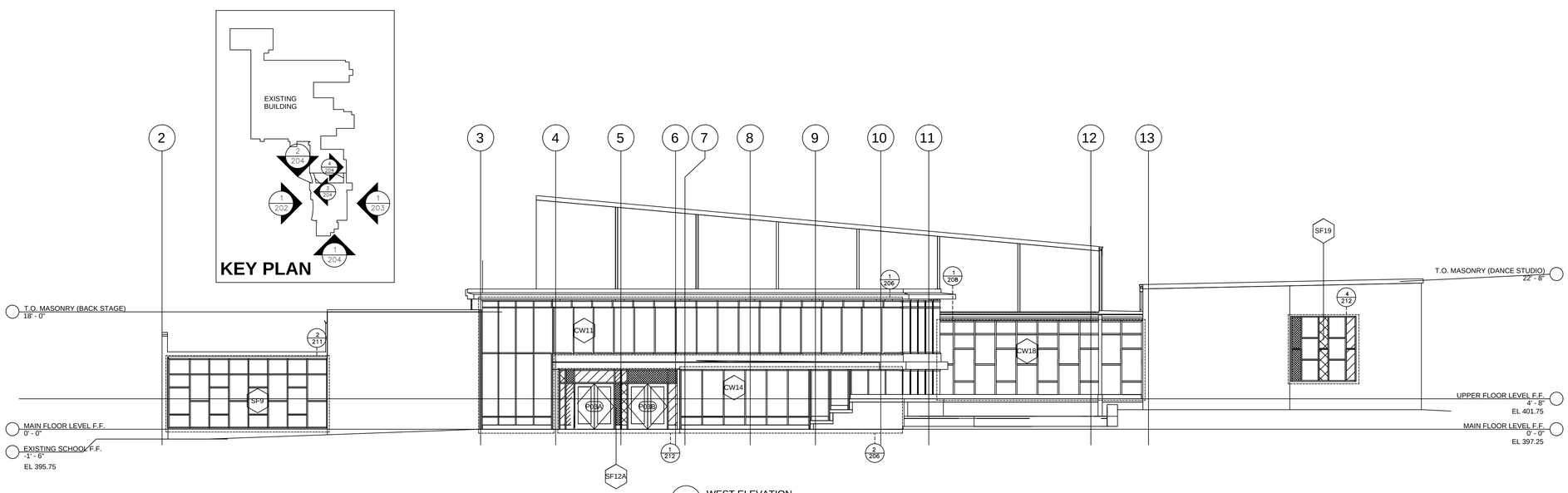

1 WEST ELEVATION
ARCH. REF.: 4B/A301

NO.	REVISION/ISSUED	DATE
1	1ST SUBMITTAL	02/28/2020

PROJECT NAME & LOCATION:

A. MARIO LOIEDERMAN MIDDLE SCHOOL
PERFORMING ARTS ADDITION

12701 GOODHILL RD
SILVER SPRING, MD 20906

SHEET TITLE:

BUILDING ELEVATION

DRAFTSMAN:

KS DRAFTING & DESIGN, LLC.
KYLE SCHNECK
HARRISBURG, PA 17111
KYLE@KSDRAFTINGDESIGNLLC.COM
717-228-7114
KSDRAFTINGDESIGNLLC.COM

ARCHITECT:

GLAZING CONTRACTOR:

DRAWN BY: JAMES LUPICA

CHECKED BY: KYLE SCHNECK

DATE: 02/28/2020

SHEET: 202

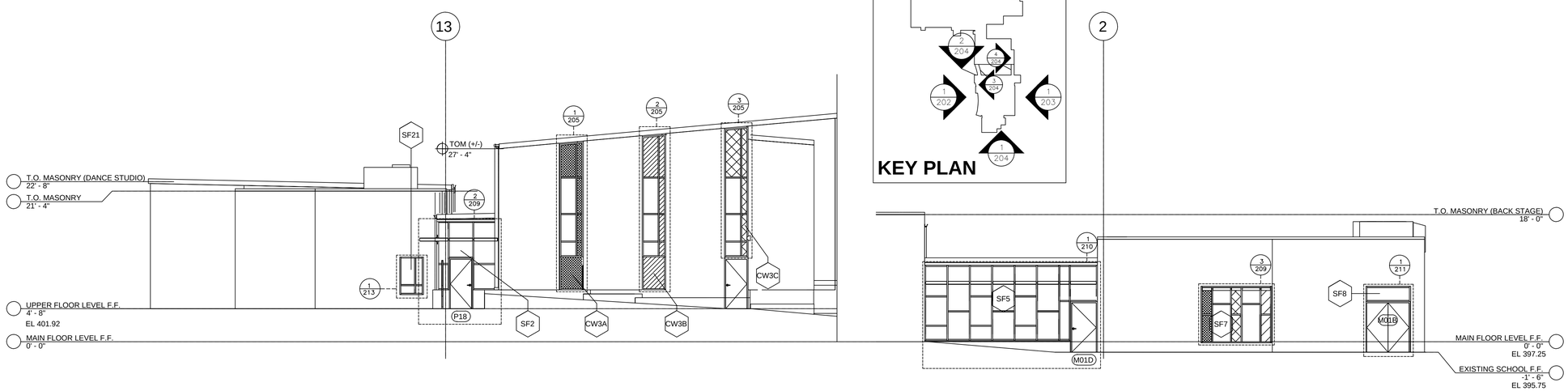

1 EAST ELEVATION
ARCH. REF.: 7B/A301

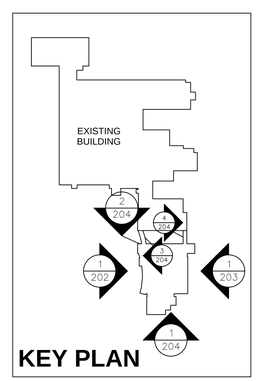

NO.	REVISION/ISSUED	DATE
1	1ST SUBMITTAL	02/28/2020

PROJECT NAME & LOCATION:

A. MARIO LOIEDERMAN MIDDLE SCHOOL
PERFORMING ARTS ADDITION

12701 GOODHILL RD
SILVER SPRING, MD 20906

SHEET TITLE:

BUILDING ELEVATION

DRAFTSMAN:

KS DRAFTING & DESIGN, LLC.
KYLE SCHNECK
HARRISBURG, PA 17111
KYLE@KSDRAFTINGDESIGNLLC.COM
717-228-7114
KSDRAFTINGDESIGNLLC.COM

ARCHITECT:

GLAZING CONTRACTOR:

DRAWN BY: JAMES LUPICA

CHECKED BY: KYLE SCHNECK

DATE: 02/28/2020

SHEET: 203

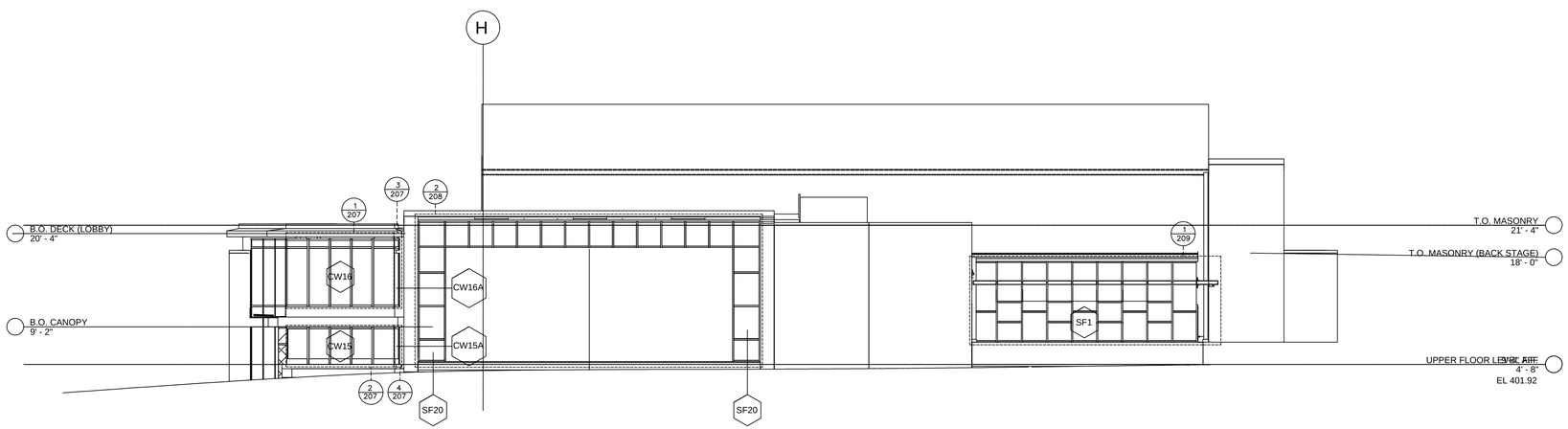

1 SOUTH ELEVATION
ARCH. REF.: 4E/A302

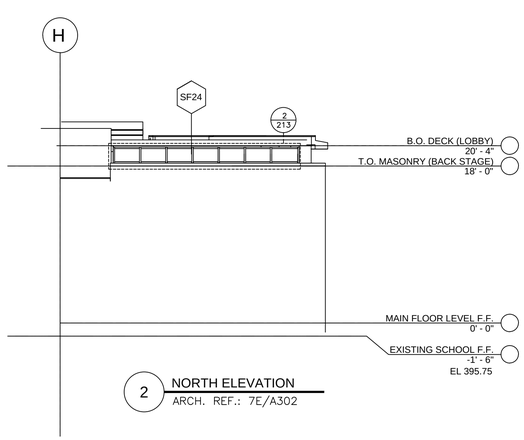

2 NORTH ELEVATION
ARCH. REF.: 7E/A302

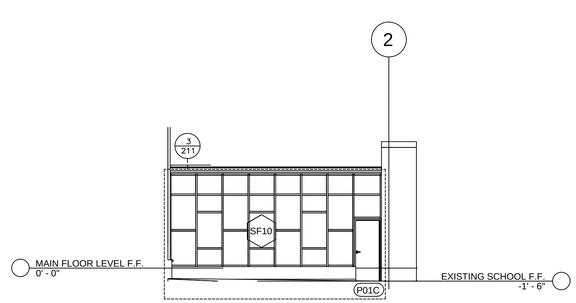

3 COURTYARD WEST ELEVATION
ARCH. REF.: 8D/A302

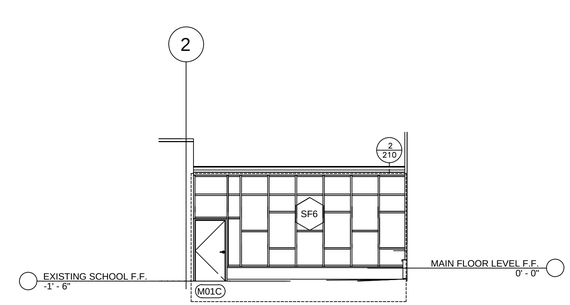

4 COURTYARD EAST ELEVATION
ARCH. REF.: 8F/A302

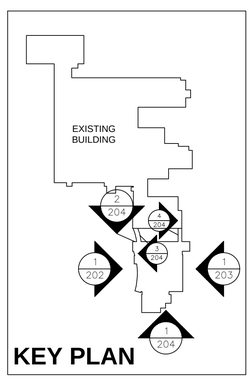

NO.	REVISION/ISSUED	DATE
1	1ST SUBMITTAL	02/28/2020

PROJECT NAME & LOCATION:
A. MARIO LOIEDERMAN MIDDLE SCHOOL
PERFORMING ARTS ADDITION
12701 GOODHILL RD
SILVER SPRING, MD 20906

SHEET TITLE:
BUILDING ELEVATIONS

DRAFTSMAN:
KS DRAFTING & DESIGN, LLC.
KYLE SCHNECK
HARRISBURG, PA 17111
KYLE@KSDRAFTINGDESIGNLLC.COM
717-228-7114
KSDRAFTINGDESIGNLLC.COM

ARCHITECT:

GLAZING CONTRACTOR:

DRAWN BY: JAMES LUPICA
CHECKED BY: KYLE SCHNECK

DATE: 02/28/2020
SHEET: 204

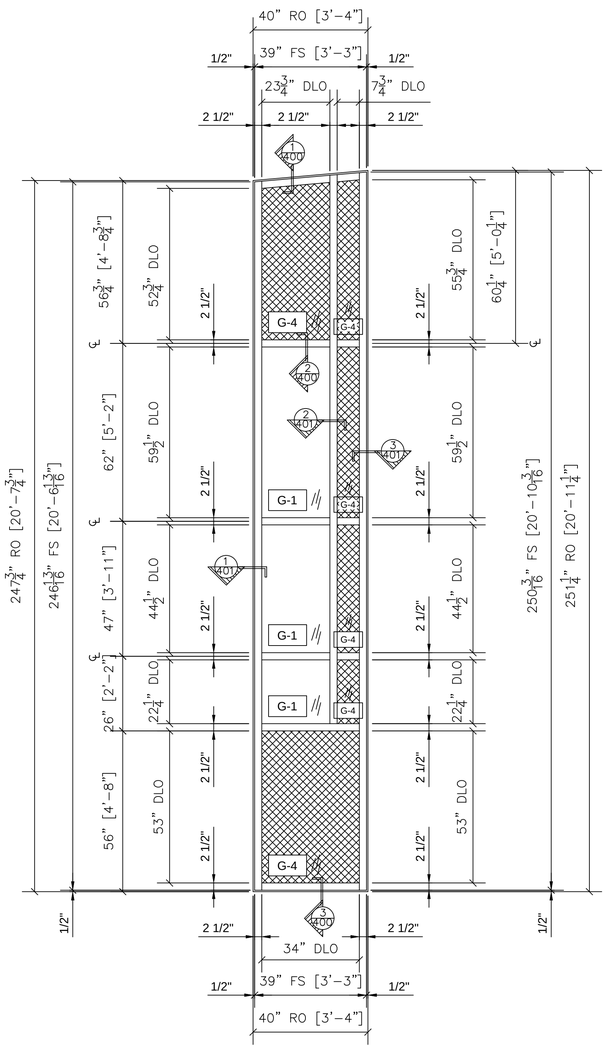

1 CW3A ELEVATION
OLDCASTLE RELIANCE
2-1/2" X 6" CURTAINWALL
ARCH. REF.: CW3A/A903

QTY	LOCATION
1	EAST ELEVATION

1 TOTAL

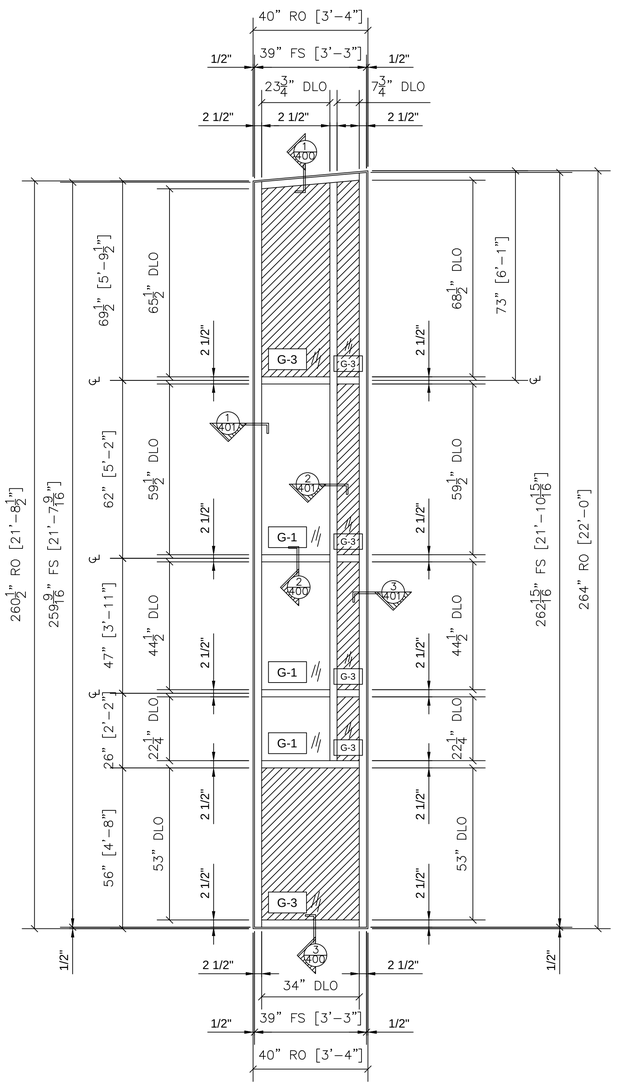

2 CW3B ELEVATION
OLDCASTLE RELIANCE
2-1/2" X 6" CURTAINWALL
ARCH. REF.: CW3B/A903

QTY	LOCATION
1	EAST ELEVATION

1 TOTAL

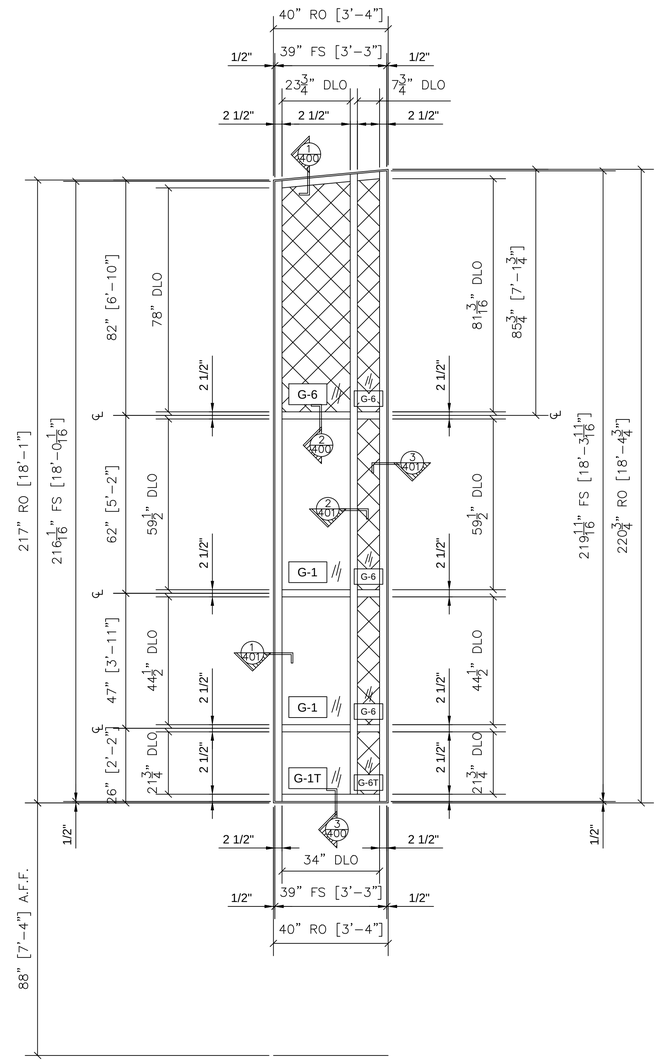

3 CW3C ELEVATION
OLDCASTLE RELIANCE
2-1/2" X 6" CURTAINWALL
ARCH. REF.: CW3C/A903

QTY	LOCATION
1	EAST ELEVATION

1 TOTAL

NO.	REVISION/ISSUED	DATE
1	1ST SUBMITTAL	02/28/2020

PROJECT NAME & LOCATION:

A. MARIO LOIEDERMAN MIDDLE SCHOOL
PERFORMING ARTS ADDITION

12701 GOODHILL RD
SILVER SPRING, MD 20906

SHEET TITLE:

FRAME ELEVATIONS

DRAFTSMAN:

KS DRAFTING & DESIGN, LLC.
KYLE SCHNECK
HARRISBURG, PA 17111
KYLE@KSDRAFTINGDESIGNLLC.COM
717-228-7114
KSDRAFTINGDESIGNLLC.COM

ARCHITECT:

GLAZING CONTRACTOR:

DRAWN BY: JAMES LUPICA

CHECKED BY: KYLE SCHNECK

DATE: 02/28/2020

SHEET: 205

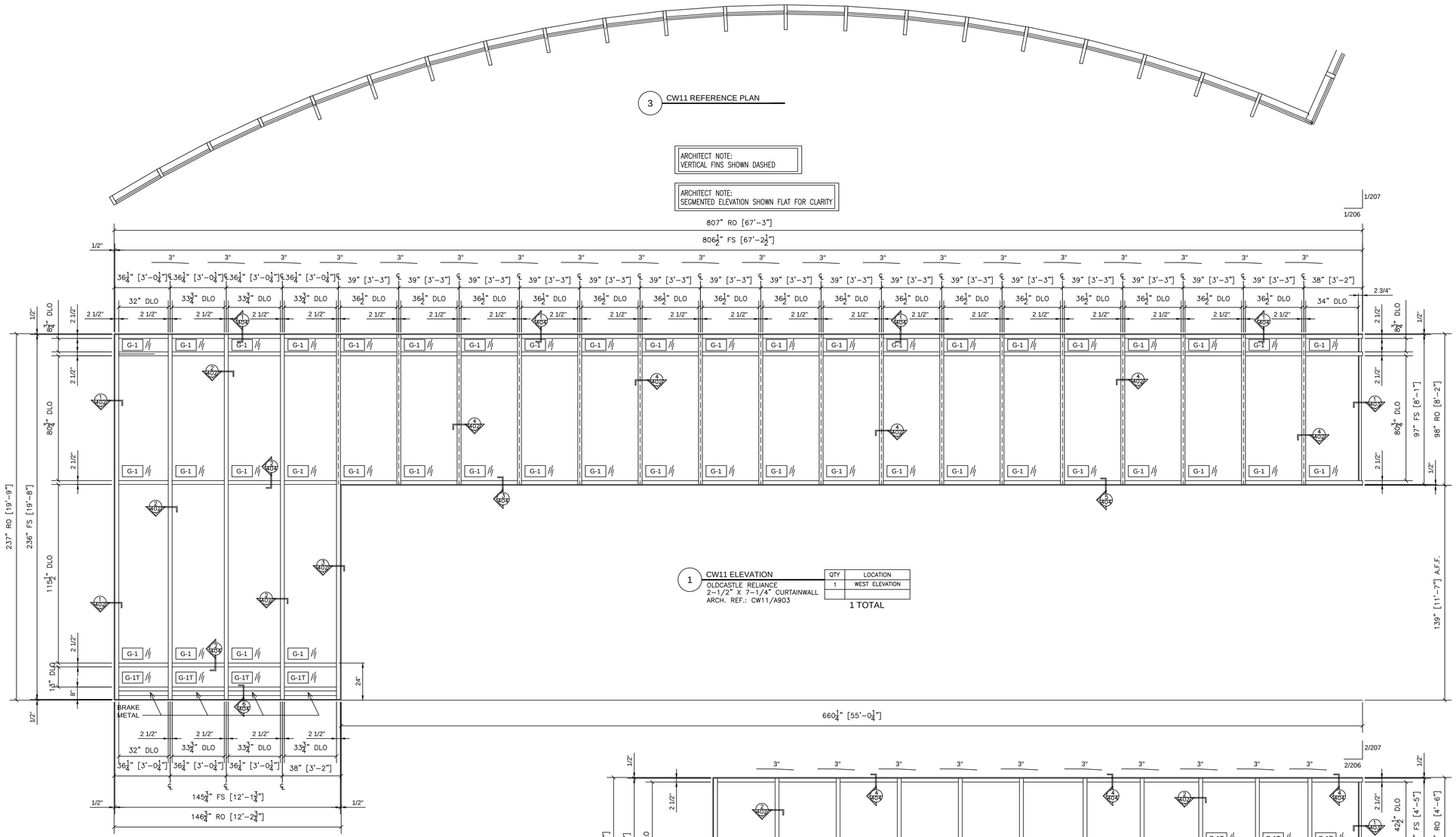

1 CW11 ELEVATION
OLDCASTLE RELIANCE
2-1/2" X 7-1/4" CURTAINWALL
ARCH. REF.: CW11/A903

QTY	LOCATION
1	WEST ELEVATION

1 TOTAL

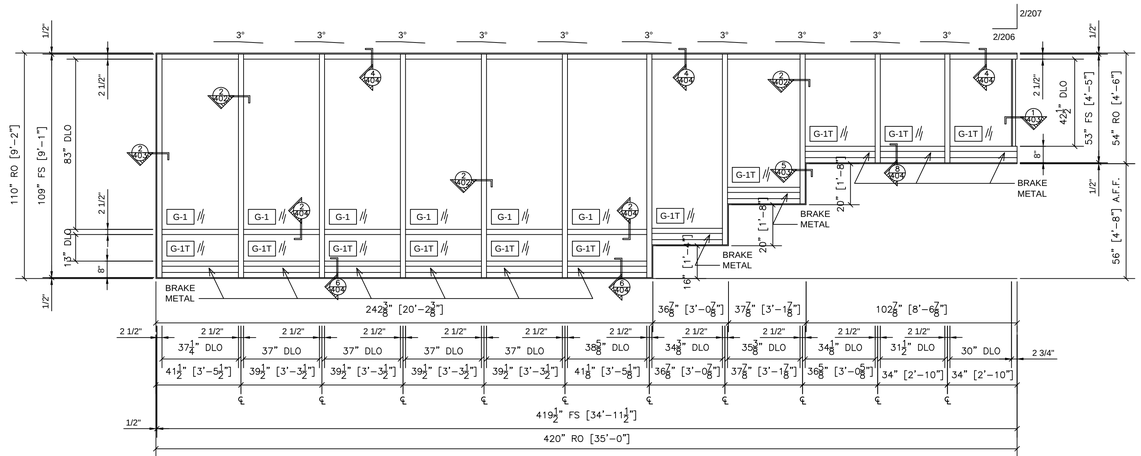

ARCHITECT NOTE:
ELEVATION SHOWN FLAT FOR CLARITY

2 CW14 ELEVATION
OLDCASTLE RELIANCE
2-1/2" X 7-1/4" CURTAINWALL
ARCH. REF.: CW14/A903

QTY	LOCATION
1	WEST ELEVATION

1 TOTAL

NO.	REVISION/ISSUED	DATE
1	1ST SUBMITTAL	02/28/2020

PROJECT NAME & LOCATION:

A. MARIO LOIEDERMAN MIDDLE SCHOOL
PERFORMING ARTS ADDITION

12701 GOODHILL RD
SILVER SPRING, MD 20906

SHEET TITLE:

FRAME ELEVATIONS

DRAFTSMAN:

KS DRAFTING & DESIGN, LLC.
KYLE SCHNECK
HARRISBURG, PA 17111
KYLE@KSDRAFTINGDESIGNLLC.COM
717-228-7114
KSDRAFTINGDESIGNLLC.COM

ARCHITECT:

GLAZING CONTRACTOR:

DRAWN BY: JAMES LUPICA

CHECKED BY: KYLE SCHNECK

DATE: 02/28/2020

SHEET: 206

1 CW16 ELEVATION

OLDCASTLE RELIANCE
2-1/2" X 7-1/4" CURTAINWALL
ARCH. REF.: CW16/A903

QTY	LOCATION
1	SOUTH ELEVATION

1 TOTAL

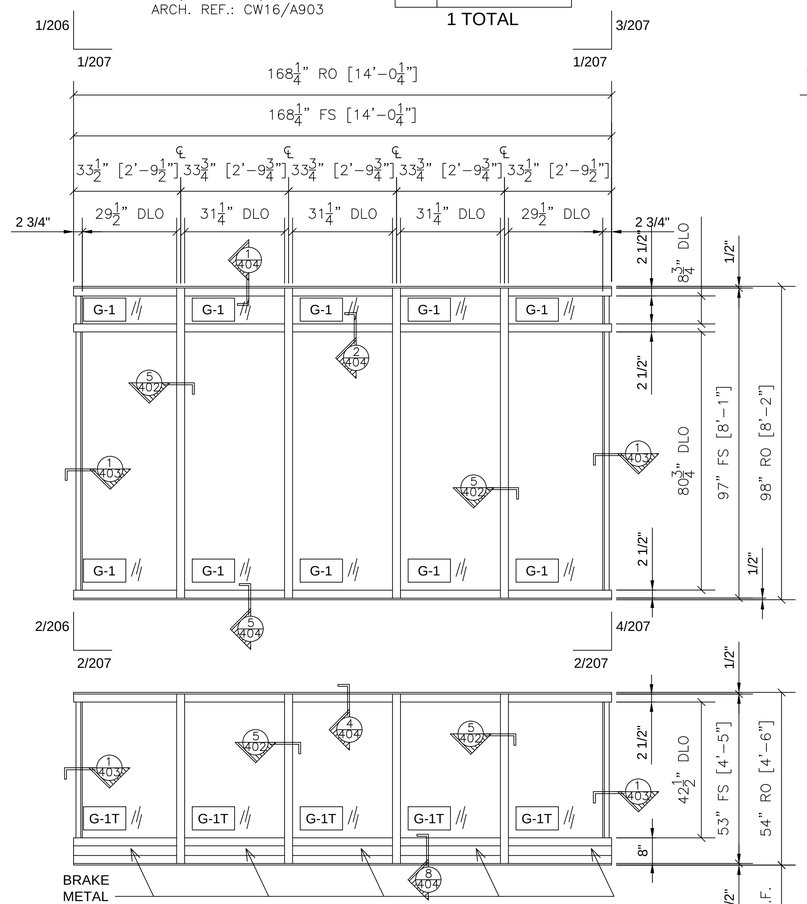

3 CW16A ELEVATION

OLDCASTLE RELIANCE
2-1/2" X 7-1/4" CURTAINWALL
ARCH. REF.: CW16A/A903

QTY	LOCATION
1	SOUTH ELEVATION

1 TOTAL

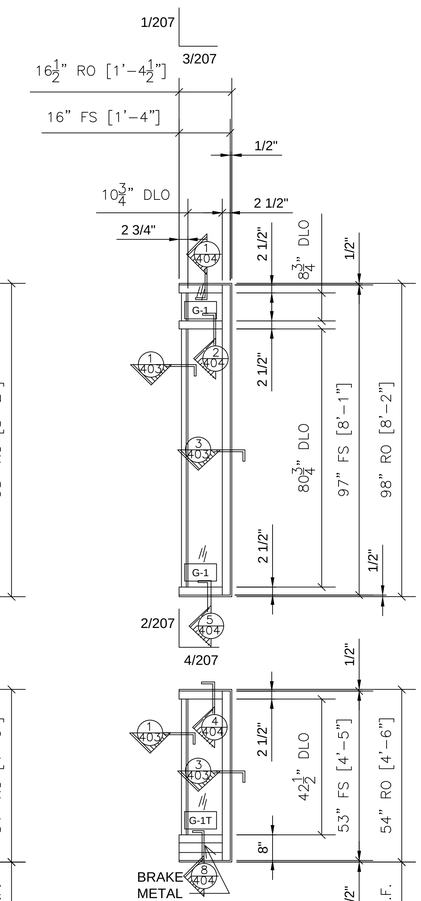

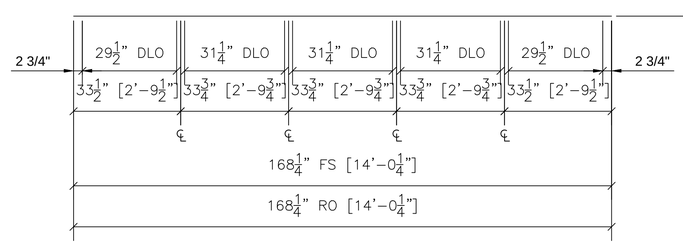

2 CW15 ELEVATION

OLDCASTLE RELIANCE
2-1/2" X 7-1/4" CURTAINWALL
ARCH. REF.: CW15/A903

QTY	LOCATION
1	SOUTH ELEVATION

1 TOTAL

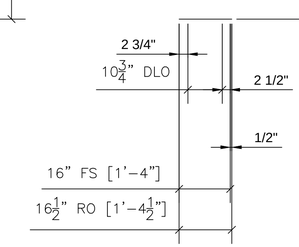

4 CW15A ELEVATION

OLDCASTLE RELIANCE
2-1/2" X 7-1/4" CURTAINWALL
ARCH. REF.: CW15A/A903

QTY	LOCATION
1	SOUTH ELEVATION

1 TOTAL

NO.	REVISION/ISSUED	DATE
1	1ST SUBMITTAL	02/28/2020

PROJECT NAME & LOCATION:

A. MARIO LOIEDERMAN MIDDLE SCHOOL
PERFORMING ARTS ADDITION

12701 GOODHILL RD
SILVER SPRING, MD 20906

SHEET TITLE:

FRAME ELEVATIONS

DRAFTSMAN:

KS DRAFTING & DESIGN, LLC.
KYLE SCHNECK
HARRISBURG, PA 17111
KYLE@KSDRAFTINGDESIGNLLC.COM
717-228-7114
KSDRAFTINGDESIGNLLC.COM

ARCHITECT:

GLAZING CONTRACTOR:

DRAWN BY: JAMES LUPICA

CHECKED BY: KYLE SCHNECK

DATE: 02/28/2020

SHEET: 207

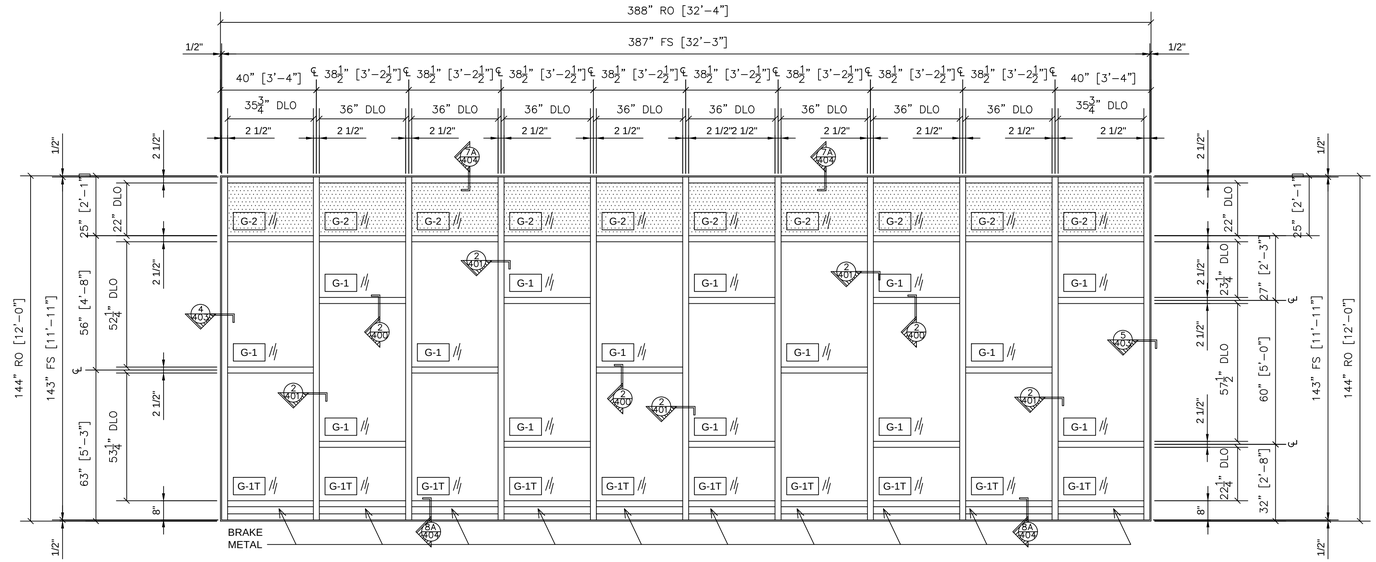

1 **CW18 ELEVATION**
OLDCASTLE RELIANCE
2-1/2" X 6" CURTAINWALL
ARCH. REF.: CW18/A903

QTY	LOCATION
1	WEST ELEVATION

1 TOTAL

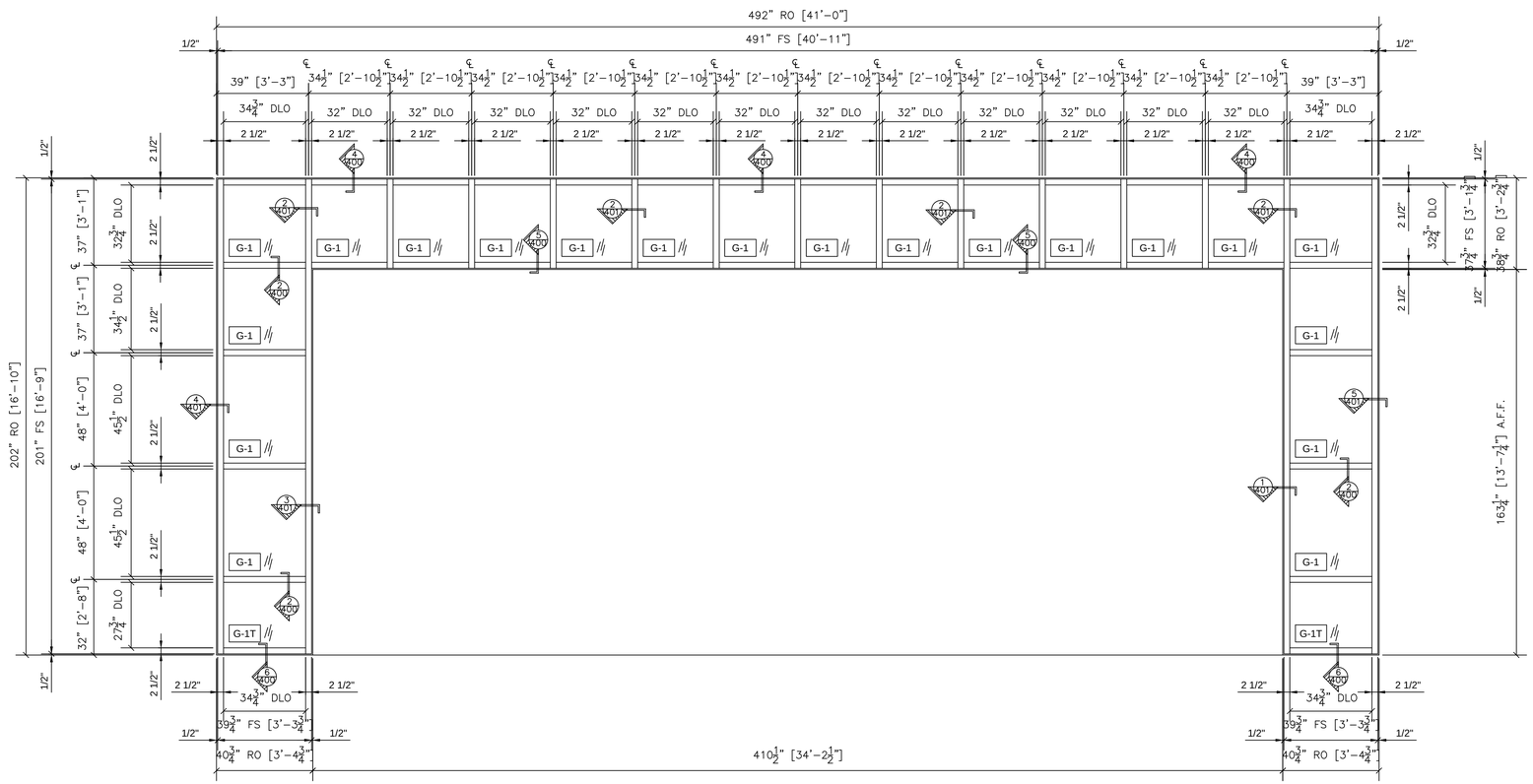

2 **SF20 ELEVATION**
OLDCASTLE RELIANCE
2-1/2" X 6" CURTAINWALL
ARCH. REF.: SF20/A903

QTY	LOCATION
1	SOUTH ELEVATION

1 TOTAL

NO.	REVISION/ISSUED	DATE
1	1ST SUBMITTAL	02/28/2020

PROJECT NAME & LOCATION:

A. MARIO LOIEDERMAN MIDDLE SCHOOL
PERFORMING ARTS ADDITION

12701 GOODHILL RD
SILVER SPRING, MD 20906

SHEET TITLE:

FRAME ELEVATIONS

DRAFTSMAN:

KS DRAFTING & DESIGN, LLC.
KYLE SCHNECK
HARRISBURG, PA 17111
KYLE@KSDRAFTINGDESIGNLLC.COM
717-228-7114
KSDRAFTINGDESIGNLLC.COM

ARCHITECT:

GLAZING CONTRACTOR:

DRAWN BY: JAMES LUPICA

CHECKED BY: KYLE SCHNECK

DATE: 02/28/2020

SHEET: 208

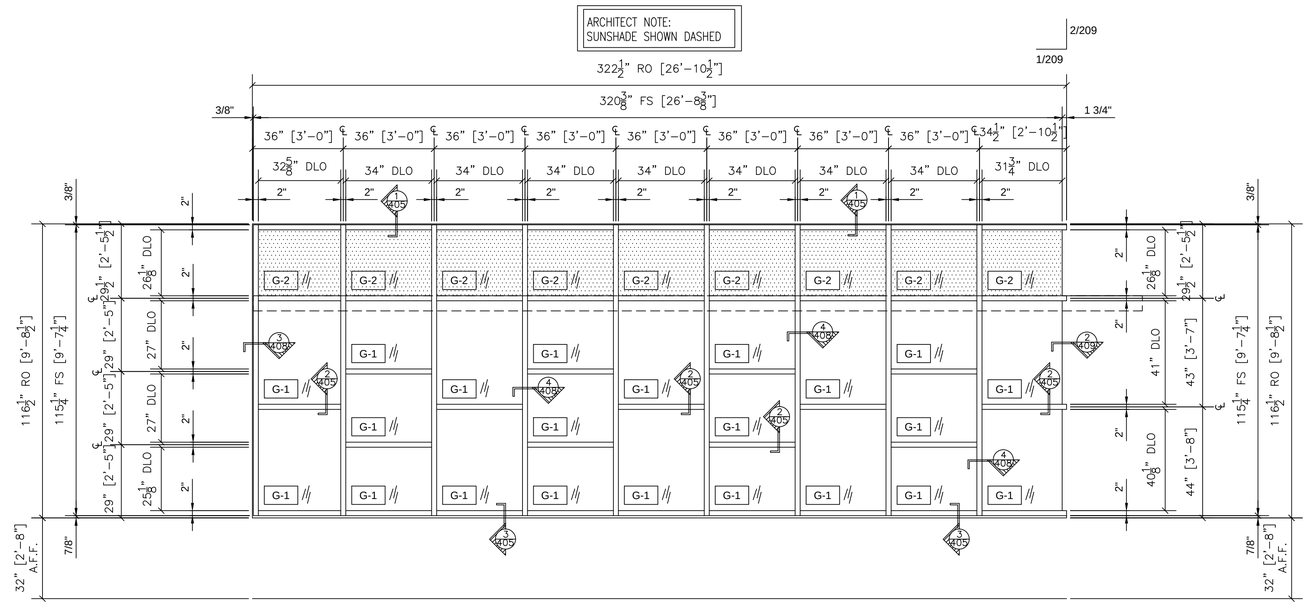

1 SF1 ELEVATION

OLDCASTLE FG-3000 XT 2" X 4-1/2"
EXTERIOR STOREFRONT
ARCH. REF.: SF1/A903

QTY	LOCATION
1	SOUTH ELEVATION

1 TOTAL

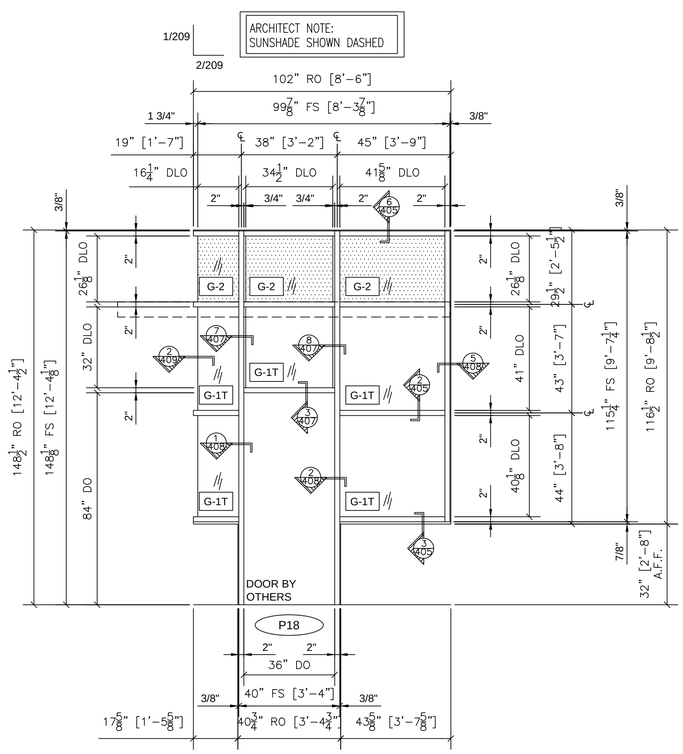

2 SF2 ELEVATION

OLDCASTLE FG-3000 XT 2" X 4-1/2"
EXTERIOR STOREFRONT. DOOR BY OTHERS.
ARCH. REF.: SF2/A903

QTY	LOCATION
1	EAST ELEVATION

1 TOTAL

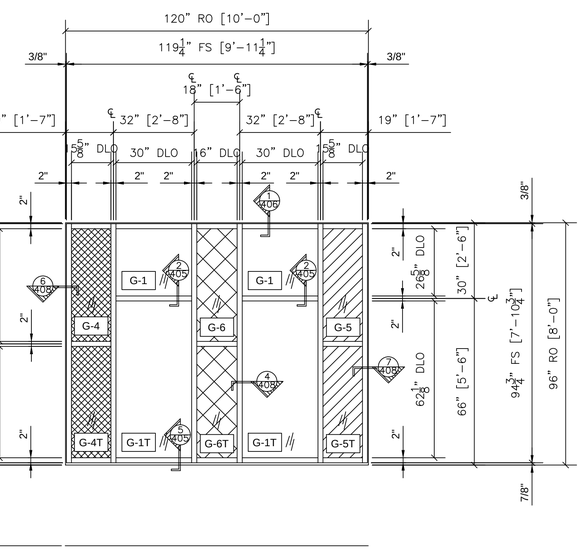

3 SF7 ELEVATION

OLDCASTLE FG-3000 XT 2" X 4-1/2"
EXTERIOR STOREFRONT
ARCH. REF.: SF7/A903

QTY	LOCATION
1	EAST ELEVATION

1 TOTAL

NO.	REVISION/ISSUED	DATE
1	1ST SUBMITTAL	02/28/2020

PROJECT NAME & LOCATION:

A. MARIO LOIEDERMAN MIDDLE SCHOOL
PERFORMING ARTS ADDITION

12701 GOODHILL RD
SILVER SPRING, MD 20906

SHEET TITLE:

FRAME ELEVATIONS

DRAFTSMAN:

KS DRAFTING & DESIGN, LLC.
KYLE SCHNECK
HARRISBURG, PA 17111
KYLE@KSDRAFTINGDESIGNLLC.COM
717-228-7114
KSDRAFTINGDESIGNLLC.COM

ARCHITECT:

GLAZING CONTRACTOR:

DRAWN BY: JAMES LUPICA

CHECKED BY: KYLE SCHNECK

DATE: 02/28/2020

SHEET: 209

ARCHITECT NOTE:
FRAME WIDTH CENTERLINES ADJUSTED TO ACCOMMODATE DOOR WIDTH AS SHOWN ON DOOR SCHEDULE.

ARCHITECT NOTE:
SUNSHADE SHOWN DASHED

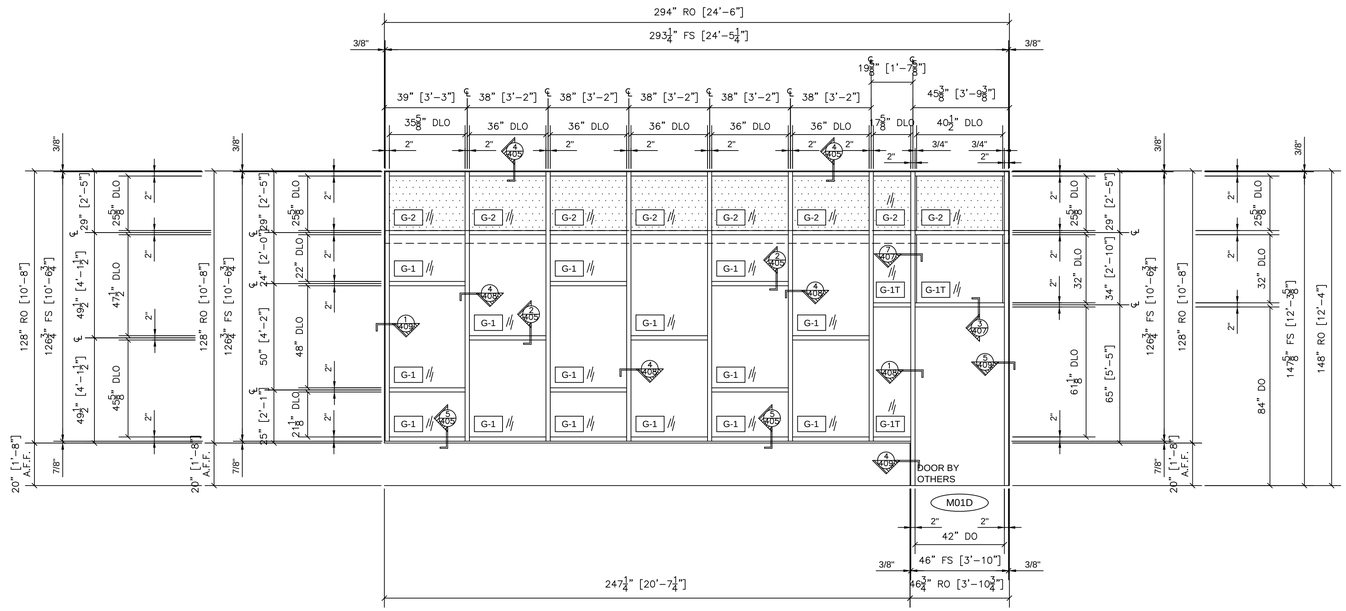

1 **SF5 ELEVATION**
OLDCASTLE FG-3000 XT 2" X 4-1/2" EXTERIOR STOREFRONT. DOOR BY OTHERS.
ARCH. REF.: SF5/A903

QTY	LOCATION
1	EAST ELEVATION

1 TOTAL

ARCHITECT NOTE:
FRAME WIDTH CENTERLINES ADJUSTED TO ACCOMMODATE DOOR WIDTH AS SHOWN ON DOOR SCHEDULE.

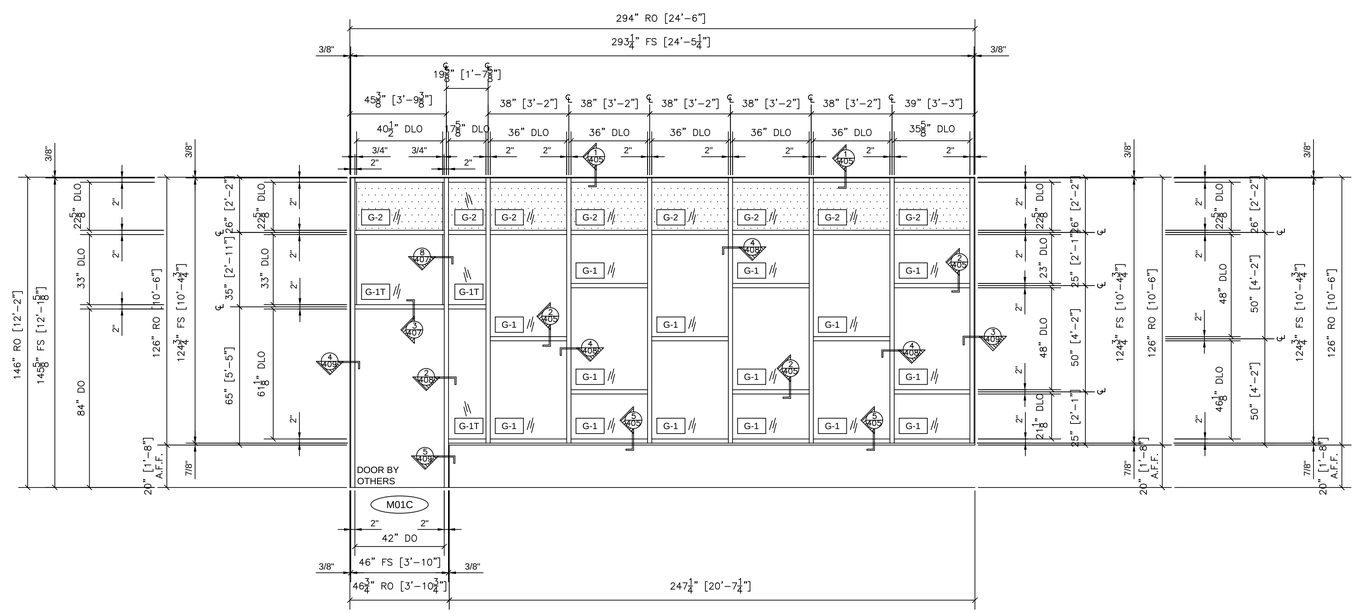

2 **SF6 ELEVATION**
OLDCASTLE FG-3000 XT 2" X 4-1/2" EXTERIOR STOREFRONT. DOOR BY OTHERS.
ARCH. REF.: SF6/A903

QTY	LOCATION
1	COURTYARD EAST ELEVATION

1 TOTAL

NO.	REVISION/ISSUED	DATE
1	1ST SUBMITTAL	02/28/2020

PROJECT NAME & LOCATION:

A. MARIO LOIEDERMAN MIDDLE SCHOOL
PERFORMING ARTS ADDITION

12701 GOODHILL RD
SILVER SPRING, MD 20906

SHEET TITLE:

FRAME ELEVATIONS

DRAFTSMAN:

KS DRAFTING & DESIGN, LLC.
KYLE SCHNECK
HARRISBURG, PA 17111
KYLE@KSDRAFTINGDESIGNLLC.COM
717-228-7114
KSDRAFTINGDESIGNLLC.COM

ARCHITECT:

GLAZING CONTRACTOR:

DRAWN BY: JAMES LUPICA

CHECKED BY: KYLE SCHNECK

DATE: 02/28/2020

SHEET: 210

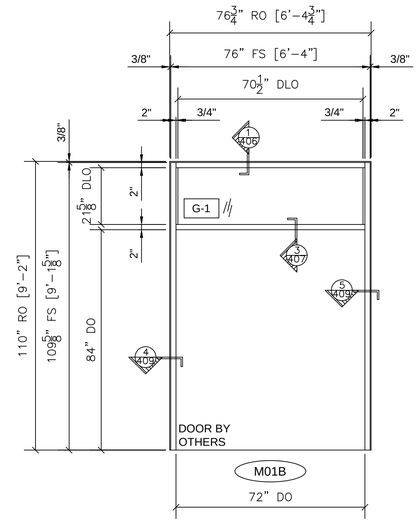

1 SF8 ELEVATION

OLDCASTLE FG-3000 XT 2" X 4-1/2"
DOOR FRAME. DOOR BY OTHERS.
ARCH. REF.: SF8/A903

QTY	LOCATION
1	EAST ELEVATION

1 TOTAL

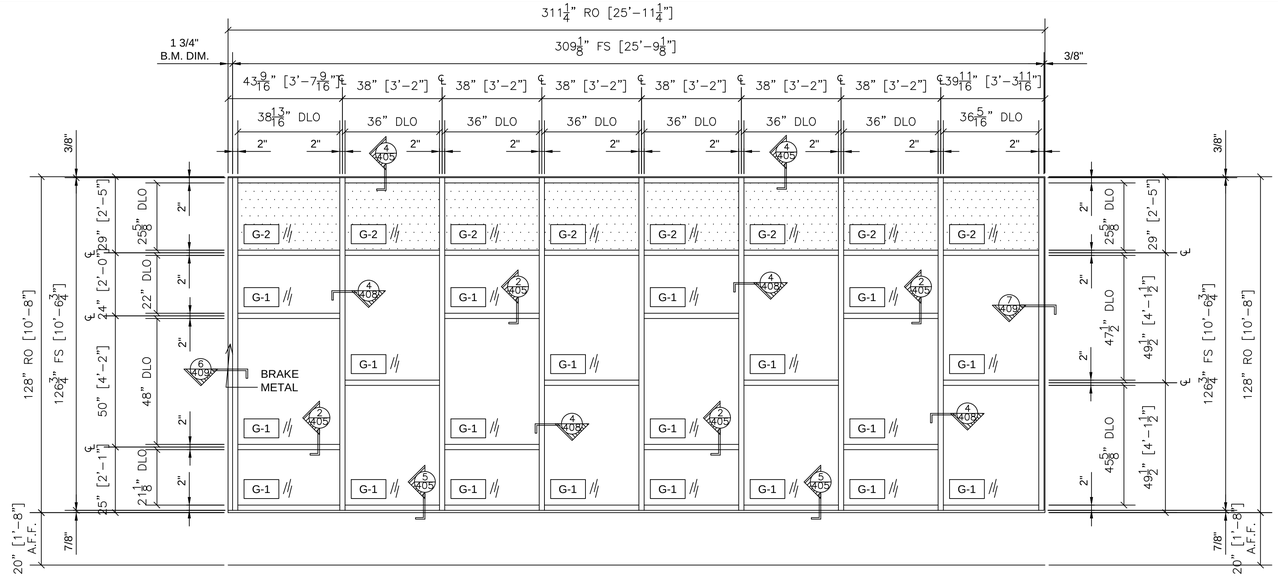

2 SF9 ELEVATION

OLDCASTLE FG-3000 XT 2" X 4-1/2"
EXTERIOR STOREFRONT
ARCH. REF.: SF9/A903

QTY	LOCATION
1	WEST ELEVATION

1 TOTAL

ARCHITECT NOTE:
FRAME WIDTH CENTERLINES ADJUSTED TO ACCOMMODATE DOOR WIDTH AS SHOWN ON DOOR SCHEDULE.

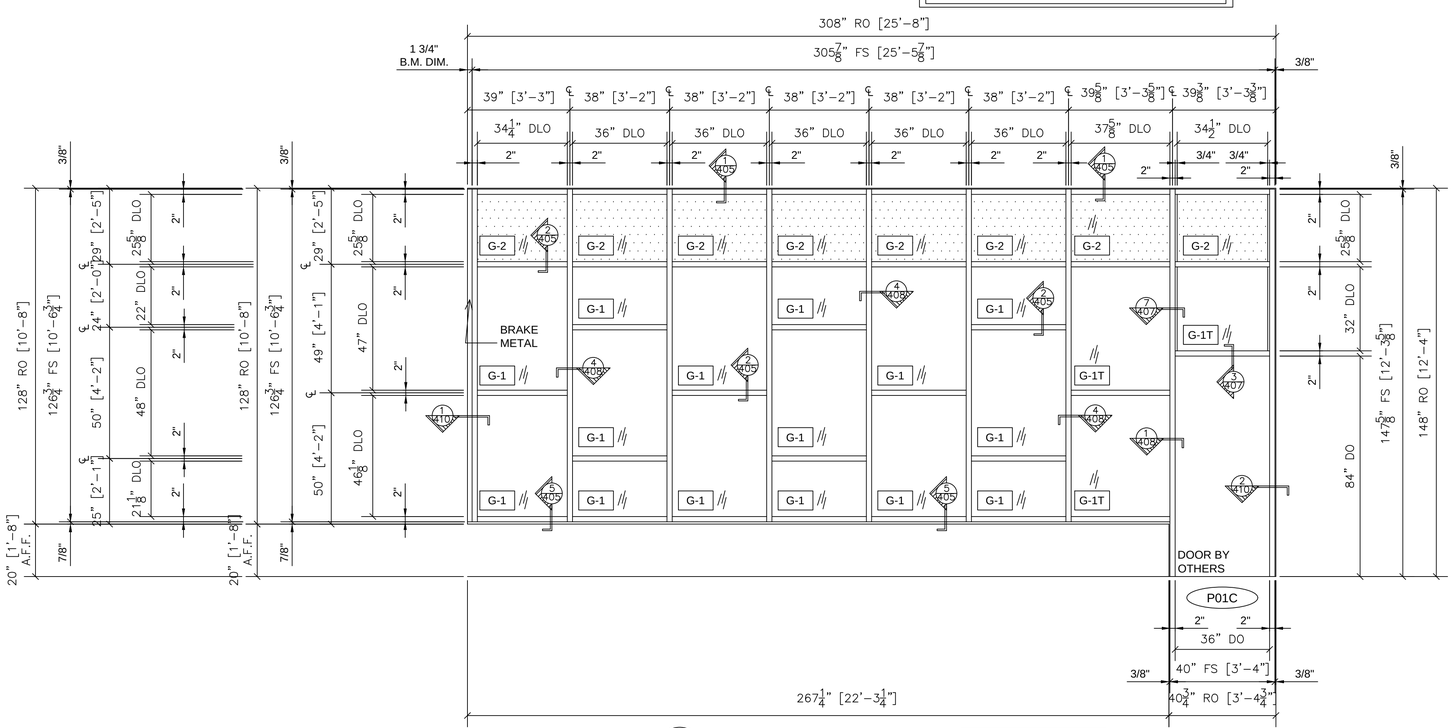

3 SF10 ELEVATION

OLDCASTLE FG-3000 XT 2" X 4-1/2"
EXTERIOR STOREFRONT. DOOR BY OTHERS.
ARCH. REF.: SF10/A903

QTY	LOCATION
1	COURTYARD WEST ELEVATION

1 TOTAL

NO.	REVISION/ISSUED	DATE
1	1ST SUBMITTAL	02/28/2020

PROJECT NAME & LOCATION:

A. MARIO LOIEDERMAN MIDDLE SCHOOL
PERFORMING ARTS ADDITION

12701 GOODHILL RD
SILVER SPRING, MD 20906

SHEET TITLE:

FRAME ELEVATIONS

DRAFTSMAN:

KS DRAFTING & DESIGN, LLC.
KYLE SCHNECK
HARRISBURG, PA 17111
KYLE@KSDRAFTINGDESIGNLLC.COM
717-228-7114
KSDRAFTINGDESIGNLLC.COM

ARCHITECT:

GLAZING CONTRACTOR:

DRAWN BY: JAMES LUPICA

CHECKED BY: KYLE SCHNECK

DATE: 02/28/2020

SHEET: 211

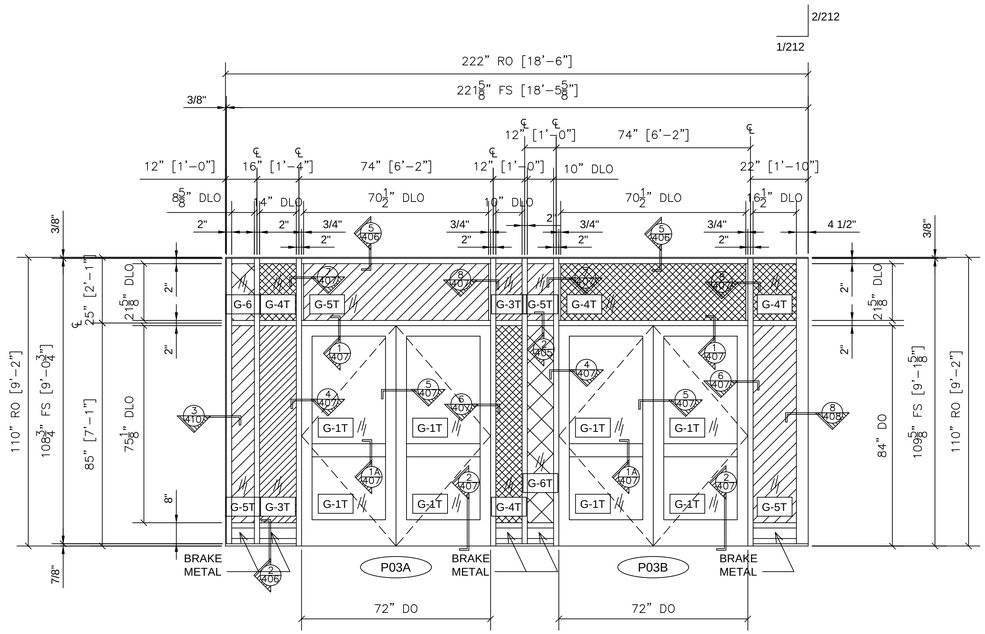

1 SF12A ELEVATION

OLDCASTLE FG-3000 XT 2" X 4-1/2" EXTERIOR STOREFRONT
OLDCASTLE THERMAL WIDE STILE STOREFRONT DOORS
ARCH. REF.: SF12A/A903

QTY	LOCATION
1	WEST ELEVATION

1 TOTAL

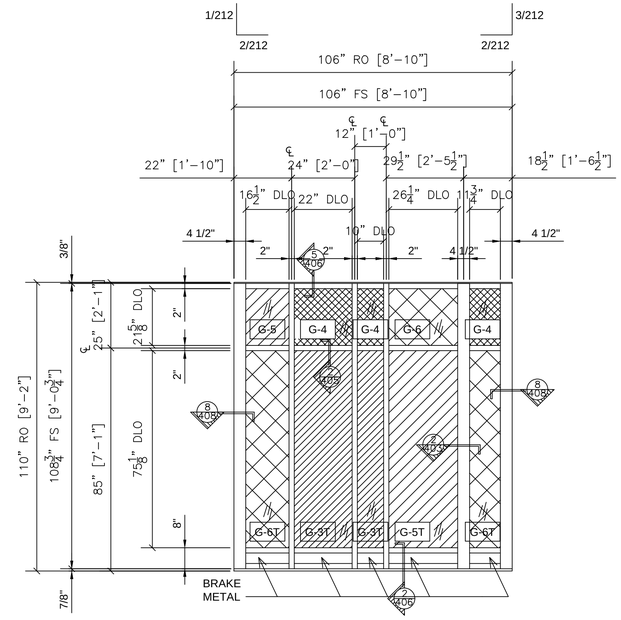

2 SF13 ELEVATION

OLDCASTLE FG-3000 XT 2" X 4-1/2"
EXTERIOR STOREFRONT
ARCH. REF.: SF13/A903

QTY	LOCATION
1	SOUTH ELEVATION

1 TOTAL

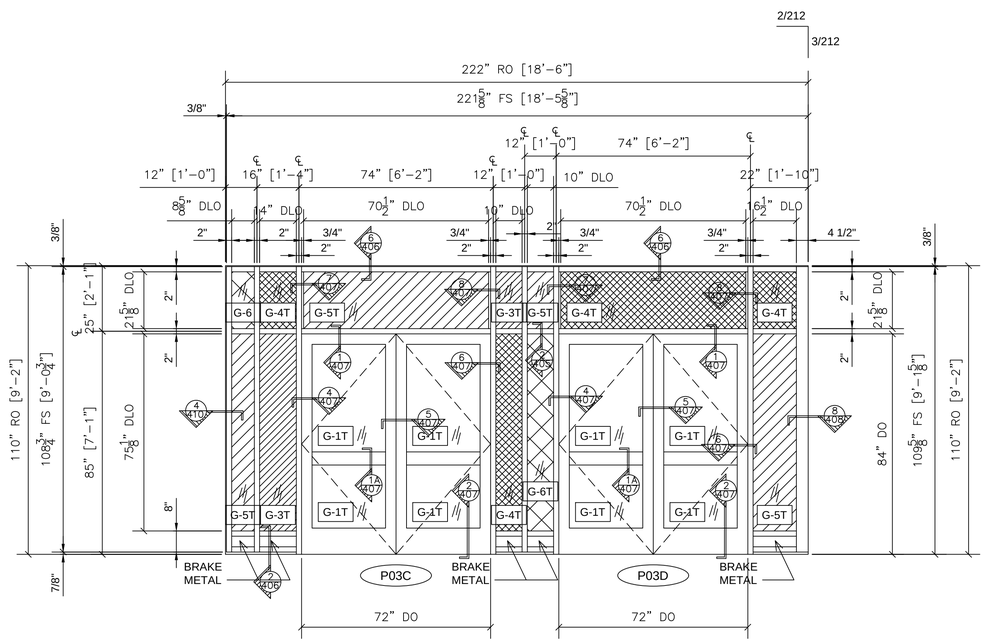

3 SF12B ELEVATION

OLDCASTLE FG-3000 XT 2" X 4-1/2" EXTERIOR STOREFRONT
OLDCASTLE THERMAL WIDE STILE STOREFRONT DOORS
ARCH. REF.: SF12B/A903

QTY	LOCATION
1	VEST. P03

1 TOTAL

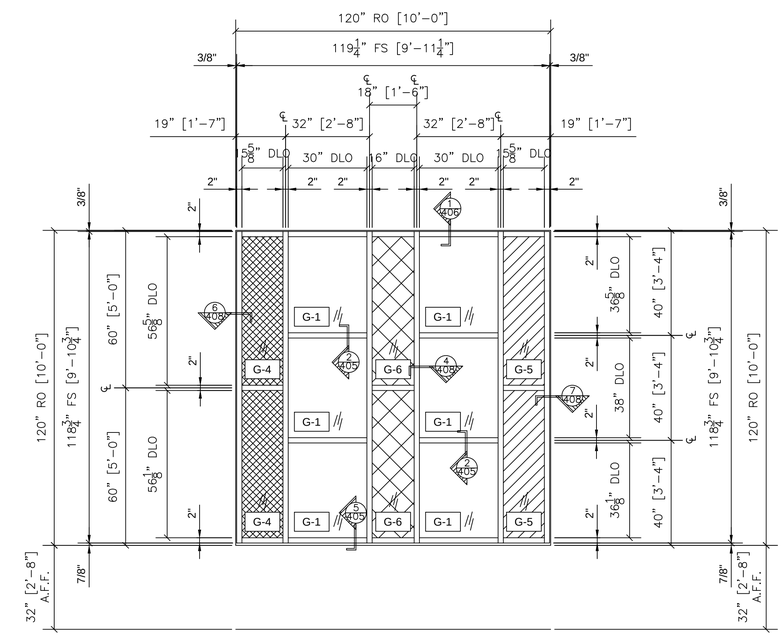

4 SF19 ELEVATION

OLDCASTLE FG-3000 XT 2" X 4-1/2"
EXTERIOR STOREFRONT
ARCH. REF.: SF19/A903

QTY	LOCATION
1	WEST ELEVATION

1 TOTAL

NO.	REVISION/ISSUED	DATE
1	1ST SUBMITTAL	02/28/2020

PROJECT NAME & LOCATION:

A. MARIO LOIEDERMAN MIDDLE SCHOOL
PERFORMING ARTS ADDITION

12701 GOODHILL RD
SILVER SPRING, MD 20906

SHEET TITLE:

FRAME ELEVATIONS

DRAFTSMAN:

KS DRAFTING & DESIGN, LLC.
KYLE SCHNECK
HARRISBURG, PA 17111
KYLE@KSDRAFTINGDESIGNLLC.COM
717-228-7114
KSDRAFTINGDESIGNLLC.COM

ARCHITECT:

GLAZING CONTRACTOR:

DRAWN BY: JAMES LUPICA

CHECKED BY: KYLE SCHNECK

DATE: 02/28/2020

SHEET: 212

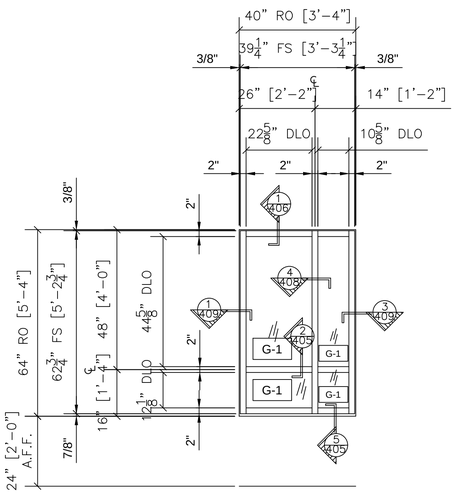

1 SF21 ELEVATION
OLDCASTLE FG-3000 XT 2" X 4-1/2"
EXTERIOR STOREFRONT
ARCH. REF.: SF21/A903

QTY	LOCATION
1	EAST ELEVATION

1 TOTAL

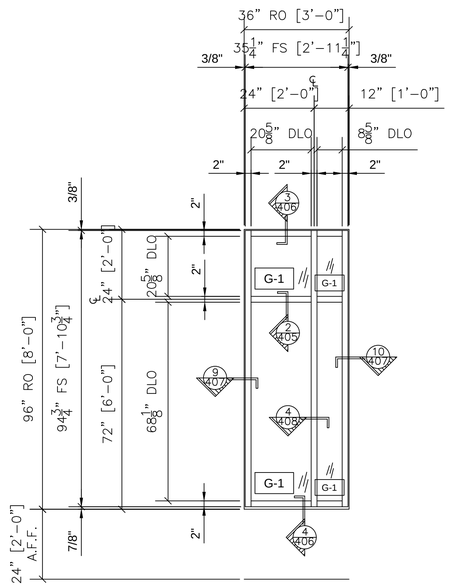

3 SF25 ELEVATION
OLDCASTLE FG-3000 XT 2" X 4-1/2"
EXTERIOR STOREFRONT
ARCH. REF.: SF25/A903

QTY	LOCATION
1	CHORAL M11

1 TOTAL

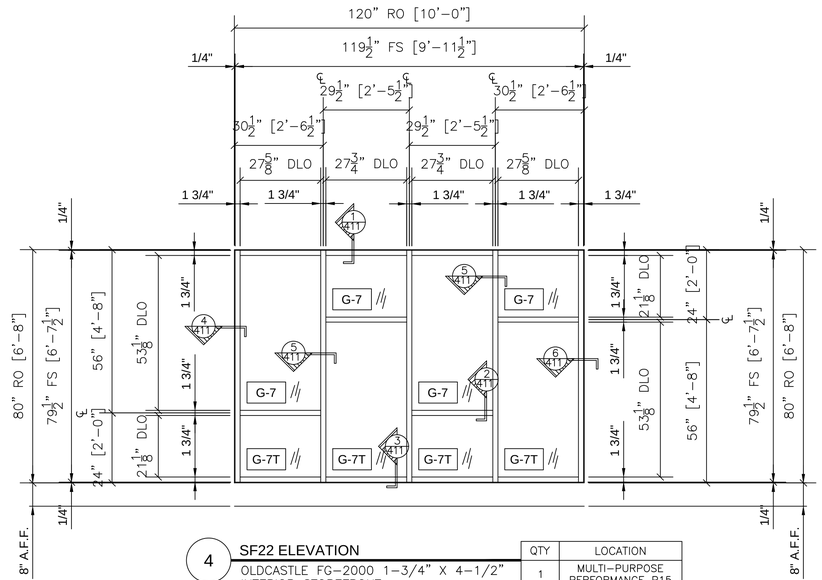

4 SF22 ELEVATION
OLDCASTLE FG-2000 1-3/4" X 4-1/2"
INTERIOR STOREFRONT
ARCH. REF.: SF22/A903

QTY	LOCATION
1	MULTI-PURPOSE PERFORMANCE P15

1 TOTAL

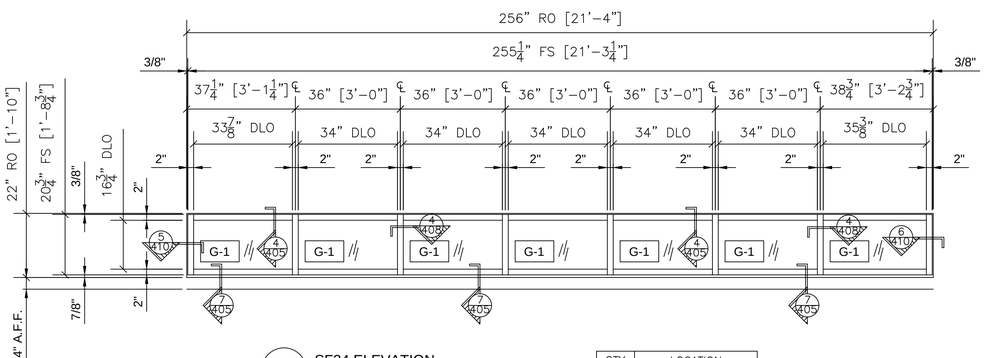

2 SF24 ELEVATION
OLDCASTLE FG-3000 XT 2" X 4-1/2"
EXTERIOR STOREFRONT
ARCH. REF.: SF24/A903

QTY	LOCATION
1	NORTH ELEVATION

1 TOTAL

NO.	REVISION/ISSUED	DATE
1	1ST SUBMITTAL	02/28/2020

PROJECT NAME & LOCATION:

A. MARIO LOIEDERMAN MIDDLE SCHOOL
PERFORMING ARTS ADDITION

12701 GOODHILL RD
SILVER SPRING, MD 20906

SHEET TITLE:

FRAME ELEVATIONS

DRAFTSMAN:

KS DRAFTING & DESIGN, LLC.
KYLE SCHNECK
HARRISBURG, PA 17111
KYLE@KSDRAFTINGDESIGNLLC.COM
717-228-7114
KSDRAFTINGDESIGNLLC.COM

ARCHITECT:

GLAZING CONTRACTOR:

DRAWN BY: JAMES LUPICA

CHECKED BY: KYLE SCHNECK

DATE: 02/28/2020

SHEET: 213

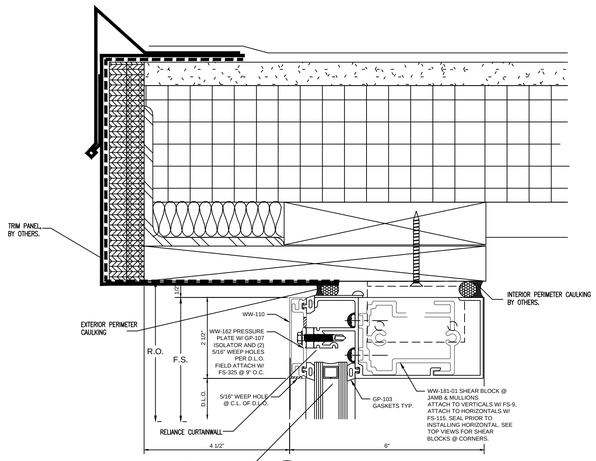

1 SECTION CUT @ HEAD
@ OLD CASTLE CURTAINWALL
7G/A904

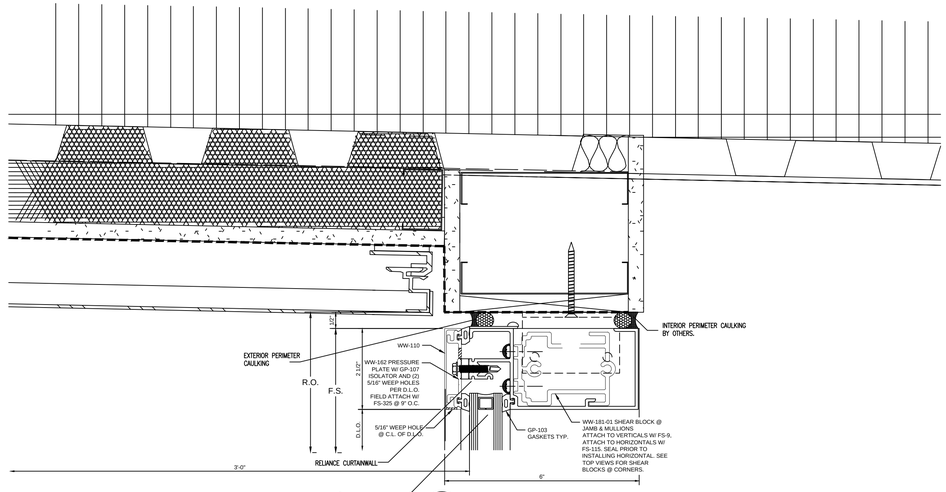

4 SECTION CUT @ HEAD
@ OLD CASTLE CURTAINWALL
3J/A904

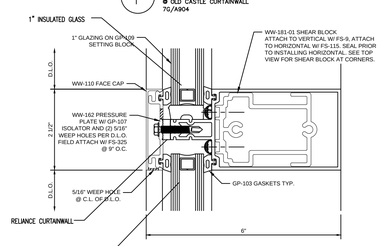

2 SECTION CUT @ HORIZONTAL
@ OLD CASTLE CURTAINWALL

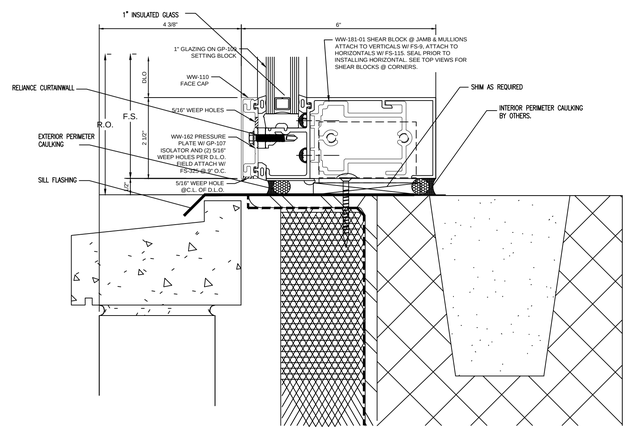

5 SECTION CUT @ SILL
@ OLD CASTLE CURTAINWALL
5J/A904

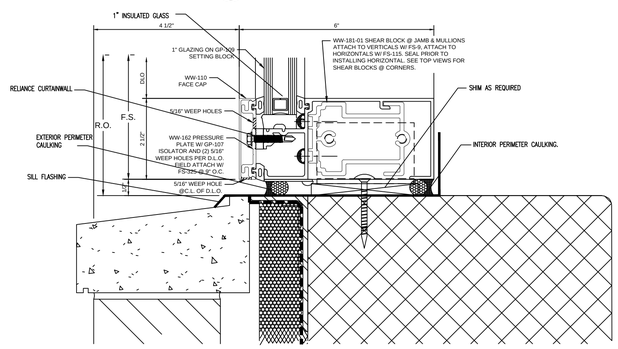

3 SECTION CUT @ SILL
@ OLD CASTLE CURTAINWALL
8G/A904

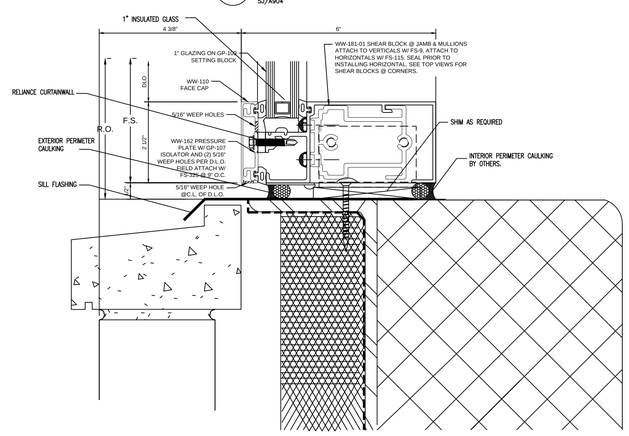

6 SECTION CUT @ SILL
@ OLD CASTLE CURTAINWALL
6J/A904

NO.	REVISION/ISSUED	DATE
1	1ST SUBMITTAL	02/28/2020

PROJECT NAME & LOCATION:

A. MARIO LOIEDERMAN MIDDLE SCHOOL
PERFORMING ARTS ADDITION
12701 GOODHILL RD
SILVER SPRING, MD 20906

SHEET TITLE:

DETAILS

DRAFTSMAN:

KS DRAFTING & DESIGN, LLC.
KYLE SCHNECK
HARRISBURG, PA 17111
KYLE@KSDRAFTINGDESIGNLLC.COM
717-228-7114
KSDRAFTINGDESIGNLLC.COM

ARCHITECT:

GLAZING CONTRACTOR:

DRAWN BY: JAMES LUPICA

CHECKED BY: KYLE SCHNECK

DATE: 02/28/2020

SHEET: 400

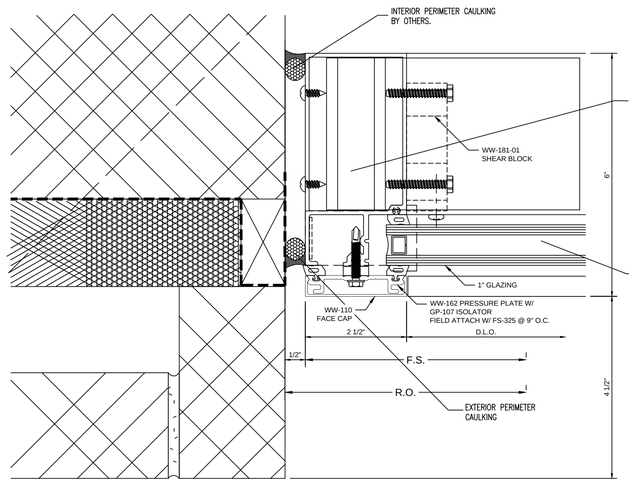

1 PLAN CUT @ JAMB
OLD CASTLE CURTAINWALL 3G/A904

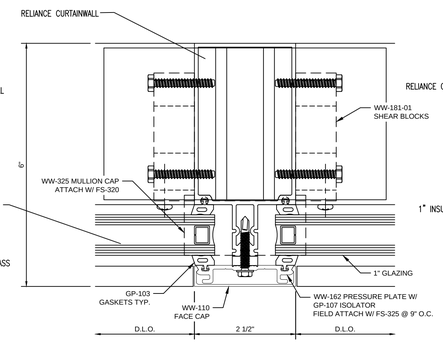

2 PLAN CUT @ VERTICAL
OLD CASTLE CURTAINWALL

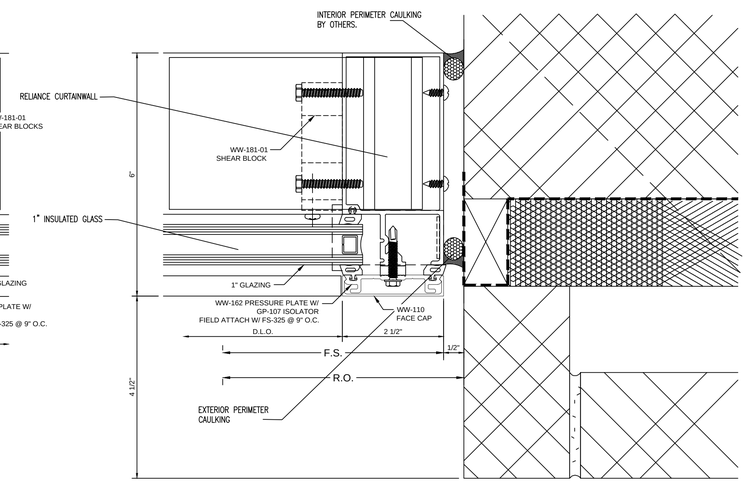

3 PLAN CUT @ JAMB
OLD CASTLE CURTAINWALL 3G/A904

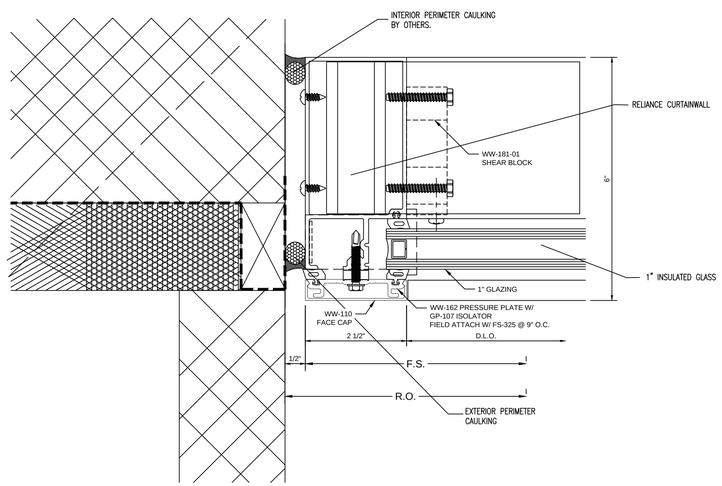

4 PLAN CUT @ JAMB
OLD CASTLE CURTAINWALL 5K/A904

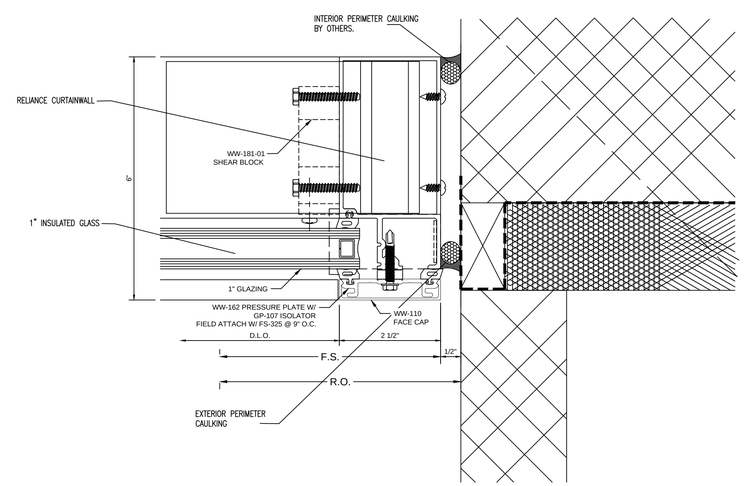

5 PLAN CUT @ JAMB
OLD CASTLE CURTAINWALL 5K/A904

NO.	REVISION/ISSUED	DATE
1	1ST SUBMITTAL	02/28/2020

PROJECT NAME & LOCATION:

A. MARIO LOIEDERMAN MIDDLE SCHOOL
PERFORMING ARTS ADDITION

12701 GOODHILL RD
SILVER SPRING, MD 20906

SHEET TITLE:

DETAILS

DRAFTSMAN:

KS DRAFTING & DESIGN, LLC.
KYLE SCHNECK
HARRISBURG, PA 17111
KYLE@KSDRAFTINGDESIGNLLC.COM
717-228-7114
KSDRAFTINGDESIGNLLC.COM

ARCHITECT:

GLAZING CONTRACTOR:

DRAWN BY: JAMES LUPICA

CHECKED BY: KYLE SCHNECK

DATE: 02/28/2020

SHEET: 401

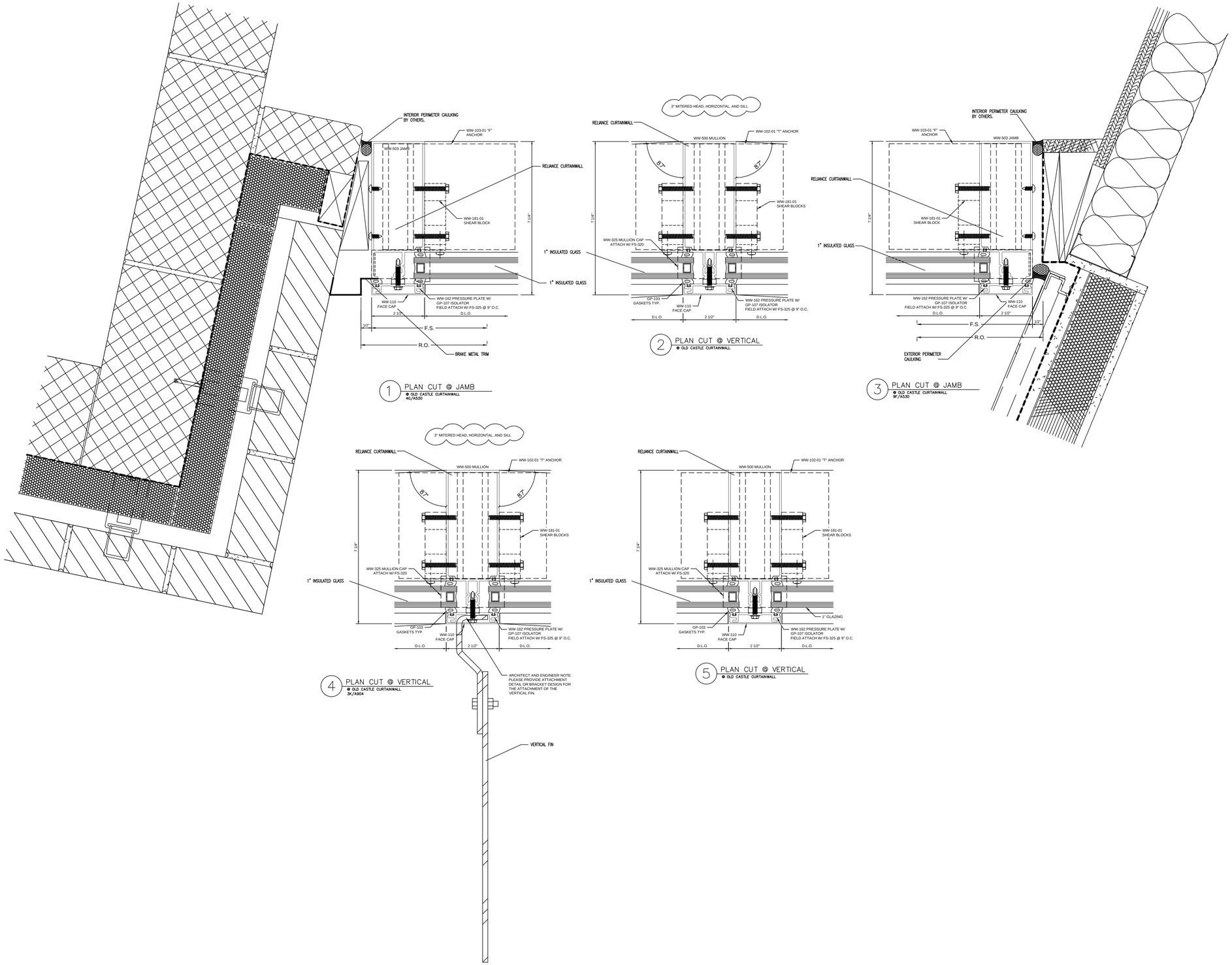

NO.	REVISION/ISSUED	DATE
1	1ST SUBMITTAL	02/28/2020

PROJECT NAME & LOCATION:

A. MARIO LOIEDERMAN MIDDLE SCHOOL
PERFORMING ARTS ADDITION

12701 GOODHILL RD
SILVER SPRING, MD 20906

SHEET TITLE:

DETAILS

DRAFTSMAN:

KS DRAFTING & DESIGN, LLC.
KYLE SCHNECK
HARRISBURG, PA 17111
KYLE@KSDRAFTINGDESIGNLLC.COM
717-228-7114
KSDRAFTINGDESIGNLLC.COM

ARCHITECT:

GLAZING CONTRACTOR:

DRAWN BY: JAMES LUPICA

CHECKED BY: KYLE SCHNECK

DATE: 02/28/2020

SHEET: 402

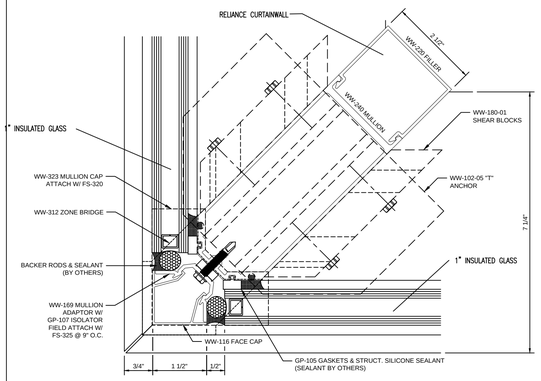

1 PLAN CUT @ CORNER
OLD CASTLE CURTAINWALL 7A/A904

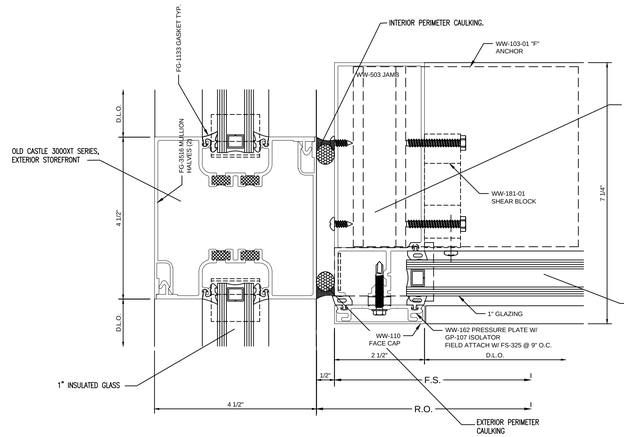

2 PLAN CUT @ JAMB
OLD CASTLE CURTAINWALL
OLD CASTLE STOREFRONT

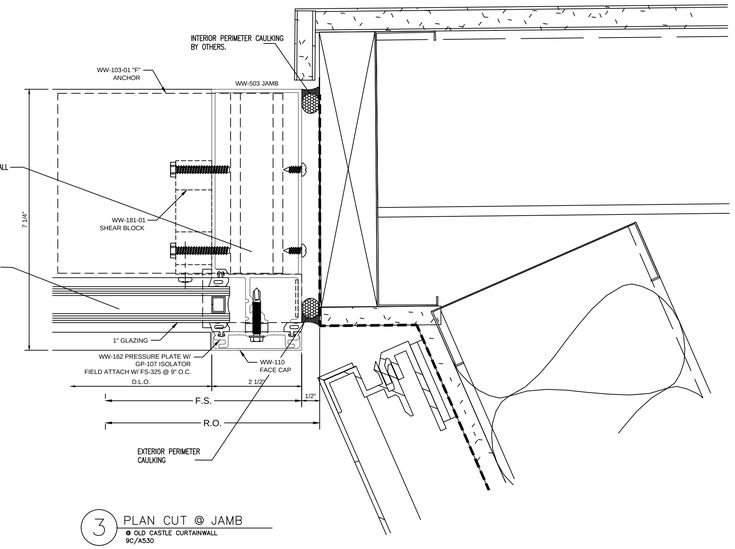

3 PLAN CUT @ JAMB
OLD CASTLE CURTAINWALL 9C/A530

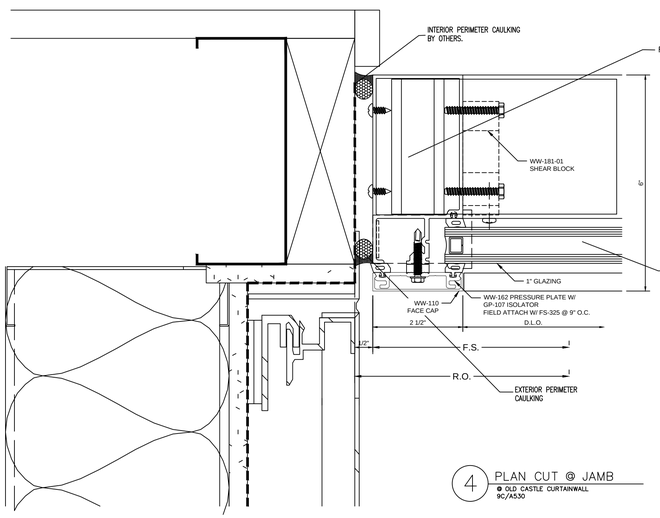

4 PLAN CUT @ JAMB
OLD CASTLE CURTAINWALL 9C/A530

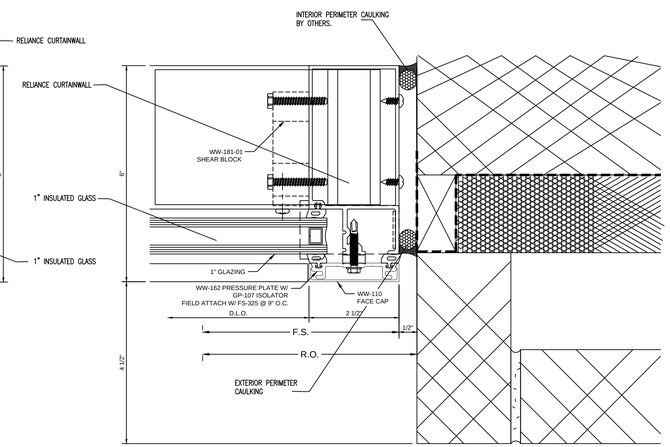

5 PLAN CUT @ JAMB
OLD CASTLE CURTAINWALL 2K/A530

NO.	REVISION/ISSUED	DATE
1	1ST SUBMITTAL	02/28/2020

PROJECT NAME & LOCATION:

A. MARIO LOIEDERMAN MIDDLE SCHOOL
PERFORMING ARTS ADDITION

12701 GOODHILL RD
SILVER SPRING, MD 20906

SHEET TITLE:

DETAILS

DRAFTSMAN:

KS DRAFTING & DESIGN, LLC.
KYLE SCHNECK
HARRISBURG, PA 17111
KYLE@KSDRAFTINGDESIGNLLC.COM
717-228-7114
KSDRAFTINGDESIGNLLC.COM

ARCHITECT:

GLAZING CONTRACTOR:

DRAWN BY: JAMES LUPICA

CHECKED BY: KYLE SCHNECK

DATE: 02/28/2020

SHEET: 403

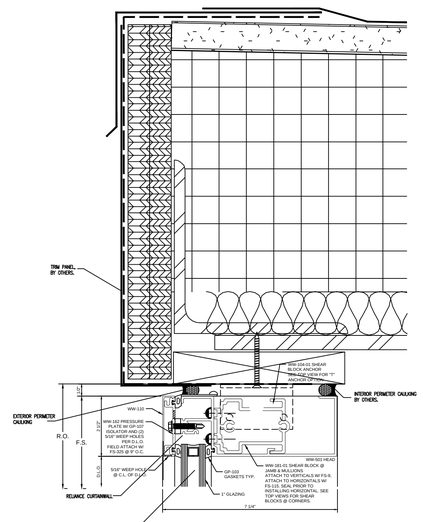

1 SECTION CUT @ HEAD
@ OLD CASTLE CURTAINWALL
3K/A510

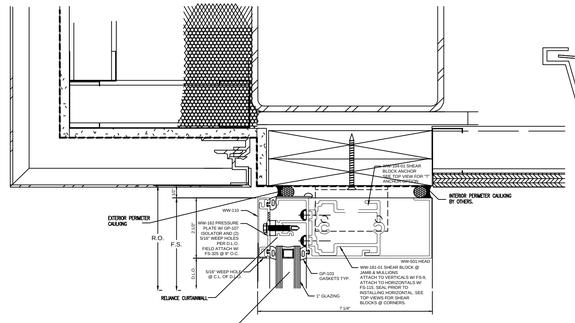

4 SECTION CUT @ HEAD
@ OLD CASTLE CURTAINWALL
8K/A510
8C/A510

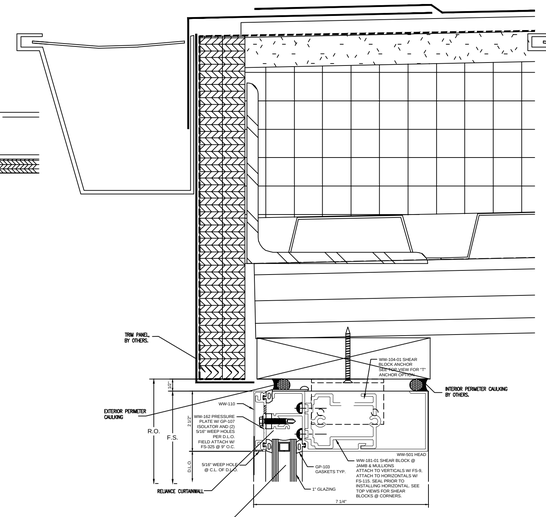

7 SECTION CUT @ HEAD
@ OLD CASTLE CURTAINWALL
3J/A511

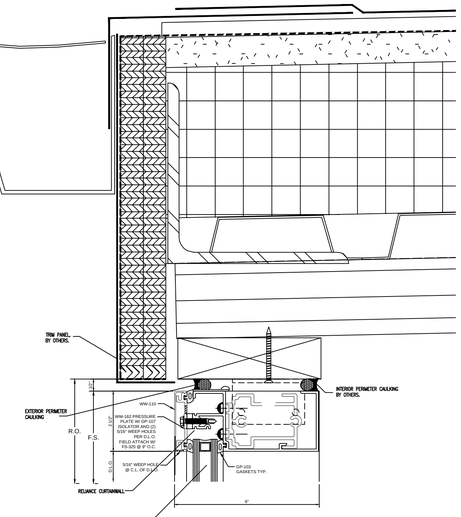

7A SECTION CUT @ HEAD
@ OLD CASTLE CURTAINWALL
3J/A511

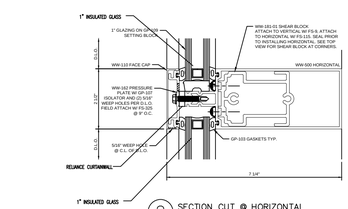

2 SECTION CUT @ HORIZONTAL
@ OLD CASTLE CURTAINWALL

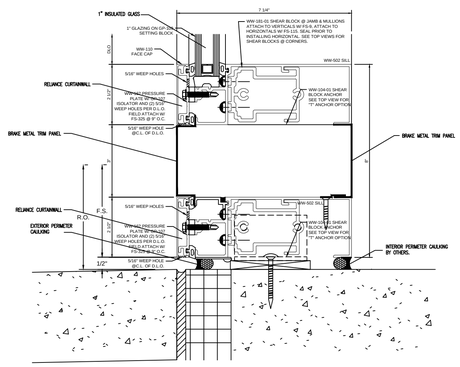

6 SECTION CUT @ SILL
@ OLD CASTLE CURTAINWALL
3C/A504

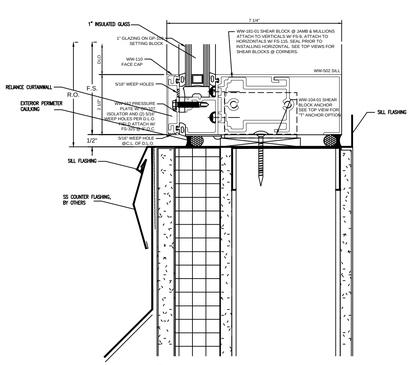

3 SECTION CUT @ SILL
@ OLD CASTLE CURTAINWALL
6E/A510

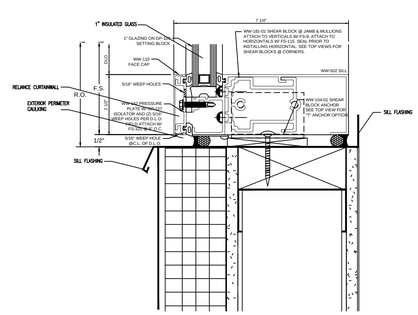

5 SECTION CUT @ SILL
@ OLD CASTLE CURTAINWALL
6E/A510
6E/A510

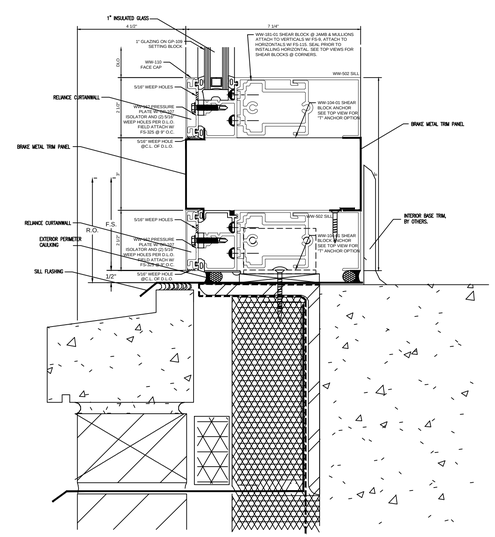

8 SECTION CUT @ SILL
@ OLD CASTLE CURTAINWALL
9K/A512

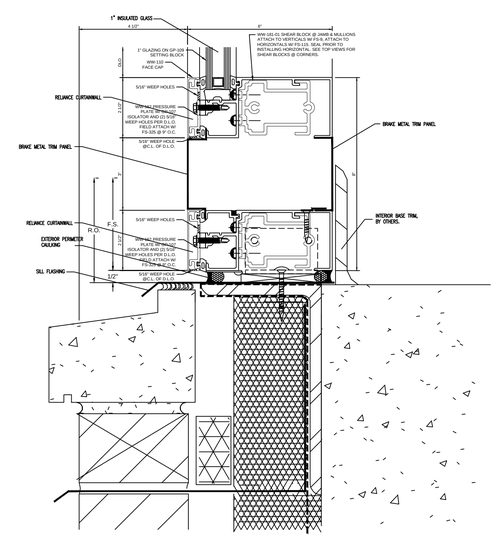

8A SECTION CUT @ SILL
@ OLD CASTLE CURTAINWALL
9K/A512

NO.	REVISION/ISSUED	DATE
1	1ST SUBMITTAL	02/28/2020

PROJECT NAME & LOCATION:

A. MARIO LOIEDERMAN MIDDLE SCHOOL
PERFORMING ARTS ADDITION

12701 GOODHILL RD
SILVER SPRING, MD 20906

SHEET TITLE:

DETAILS

DRAFTSMAN:

KS DRAFTING & DESIGN, LLC.
KYLE SCHNECK
HARRISBURG, PA 17111
KYLE@KSDRAFTINGDESIGNLLC.COM
717-228-7114
KSDRAFTINGDESIGNLLC.COM

ARCHITECT:

GLAZING CONTRACTOR:

DRAWN BY: JAMES LUPICA

CHECKED BY: KYLE SCHNECK

DATE: 02/28/2020

SHEET: 404

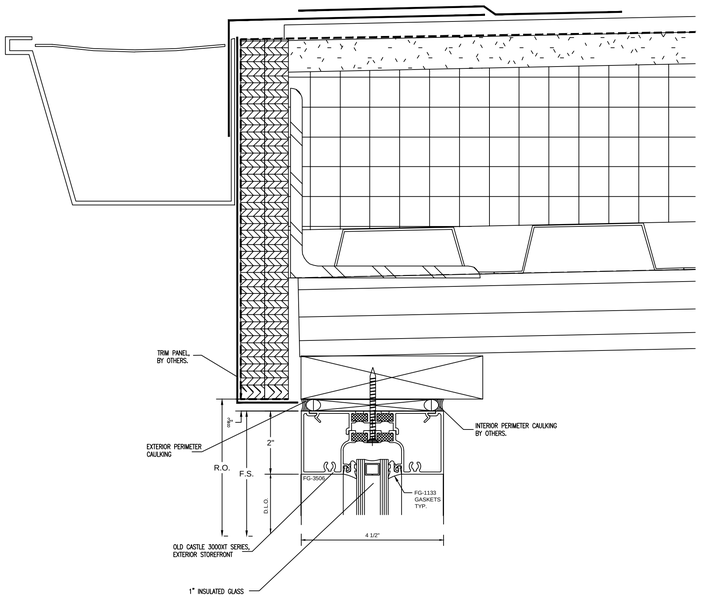

1 SECTION CUT @ HEAD
● OLD CASTLE STOREFRONT
3J/A511

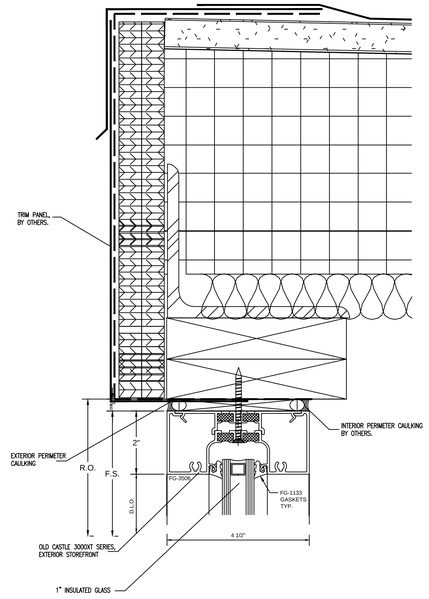

4 SECTION CUT @ HEAD
● OLD CASTLE STOREFRONT
9C/A511
3B/A510

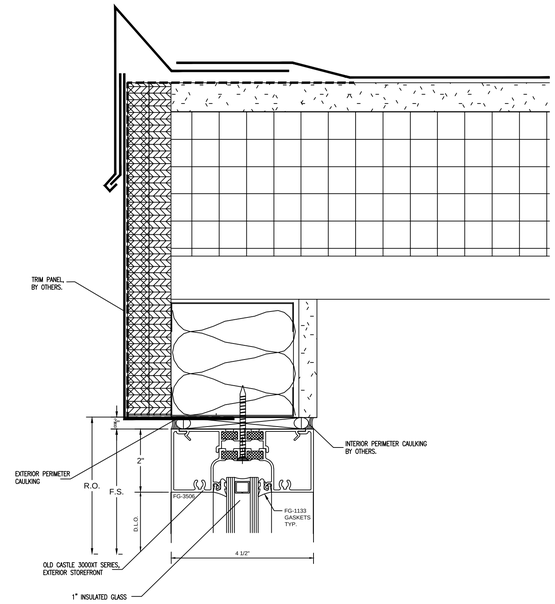

6 SECTION CUT @ HEAD
● OLD CASTLE STOREFRONT
7E/A512

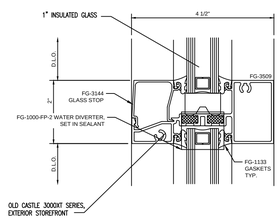

2 SECTION CUT @ HORIZONTAL
● OLD CASTLE STOREFRONT

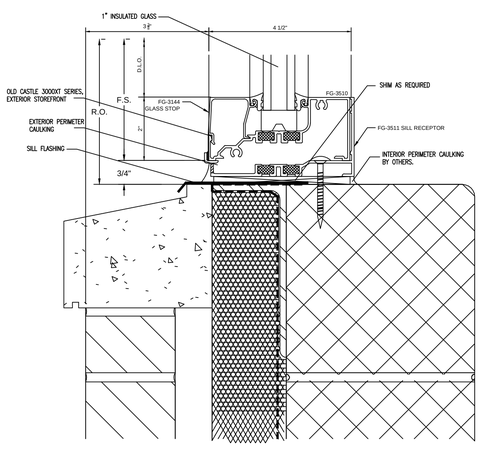

3 SECTION CUT @ SILL
● OLD CASTLE STOREFRONT
6J/A512

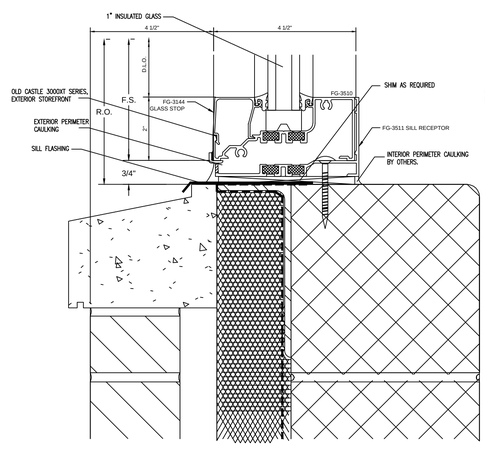

5 SECTION CUT @ SILL
● OLD CASTLE STOREFRONT
6J/A512

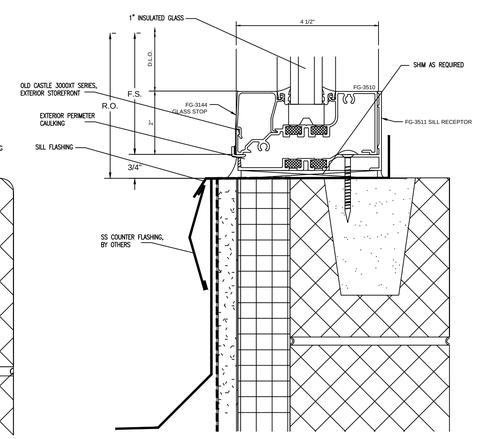

7 SECTION CUT @ SILL
● OLD CASTLE STOREFRONT
5B/A510

NO.	REVISION/ISSUED	DATE
1	1ST SUBMITTAL	02/28/2020

PROJECT NAME & LOCATION:

A. MARIO LOIEDERMAN MIDDLE SCHOOL
PERFORMING ARTS ADDITION

12701 GOODHILL RD
SILVER SPRING, MD 20906

SHEET TITLE:

DETAILS

DRAFTSMAN:

KS DRAFTING & DESIGN, LLC.
KYLE SCHNECK
HARRISBURG, PA 17111
KYLE@KSDRAFTINGDESIGNLLC.COM
717-228-7114
KSDRAFTINGDESIGNLLC.COM

ARCHITECT:

GLAZING CONTRACTOR:

DRAWN BY: JAMES LUPICA

CHECKED BY: KYLE SCHNECK

DATE: 02/28/2020

SHEET: 405

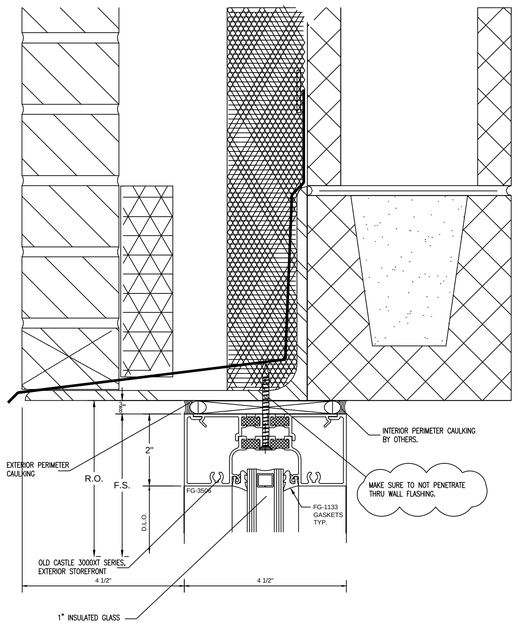

1 SECTION CUT @ HEAD
@ OLD CASTLE STOREFRONT
7K/A904

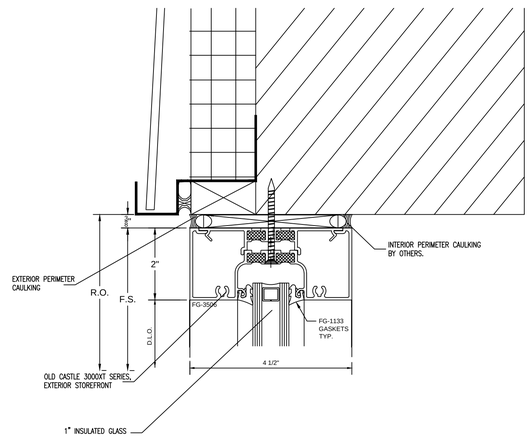

3 SECTION CUT @ HEAD
@ OLD CASTLE STOREFRONT
6E/A904

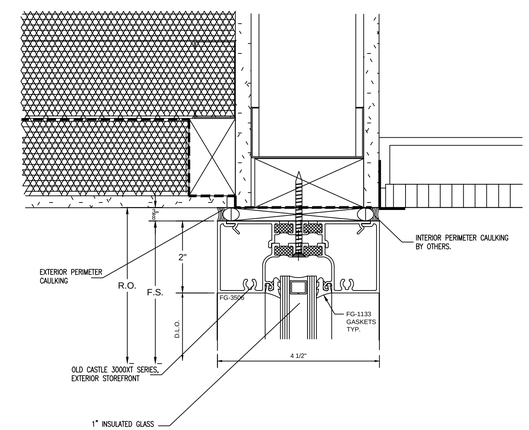

5 SECTION CUT @ HEAD
@ OLD CASTLE STOREFRONT
6E/A510

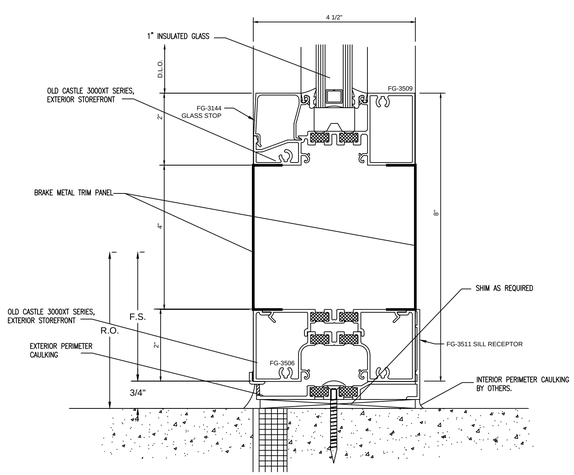

2 SECTION CUT @ HORIZONTAL & SILL
@ OLD CASTLE STOREFRONT
3E/A904

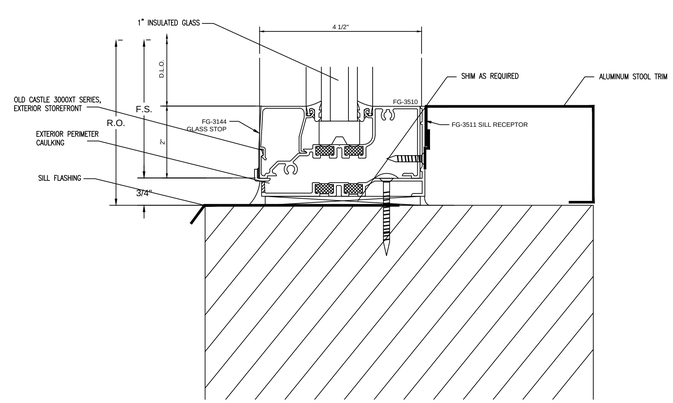

4 SECTION CUT @ SILL
@ OLD CASTLE STOREFRONT
9E/A904

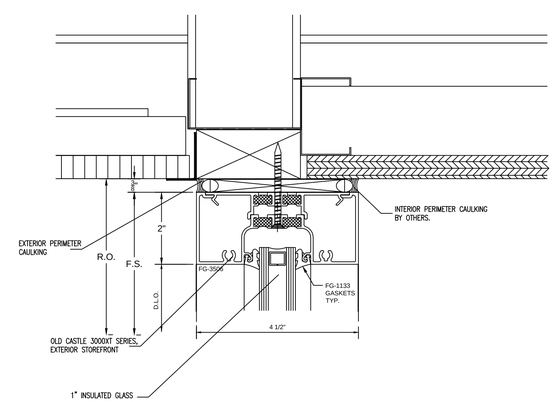

6 SECTION CUT @ HEAD
@ OLD CASTLE STOREFRONT
6E/A510

NO.	REVISION/ISSUED	DATE
1	1ST SUBMITTAL	02/28/2020

PROJECT NAME & LOCATION:

A. MARIO LOIEDERMAN MIDDLE SCHOOL
PERFORMING ARTS ADDITION

12701 GOODHILL RD
SILVER SPRING, MD 20906

SHEET TITLE:

DETAILS

DRAFTSMAN:

KS DRAFTING & DESIGN, LLC.
KYLE SCHNECK
HARRISBURG, PA 17111
KYLE@KSDRAFTINGDESIGNLLC.COM
717-228-7114
KSDRAFTINGDESIGNLLC.COM

ARCHITECT:

GLAZING CONTRACTOR:

DRAWN BY: JAMES LUPICA

CHECKED BY: KYLE SCHNECK

DATE: 02/28/2020

SHEET: 406

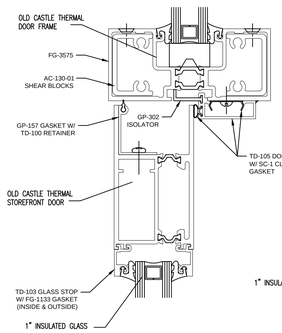

1 SECTION CUT @ TOP RAIL
OLD CASTLE DOOR FRAME HEAD

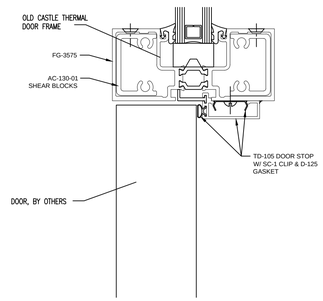

3 SECTION CUT @ TOP RAIL
OLD CASTLE DOOR FRAME

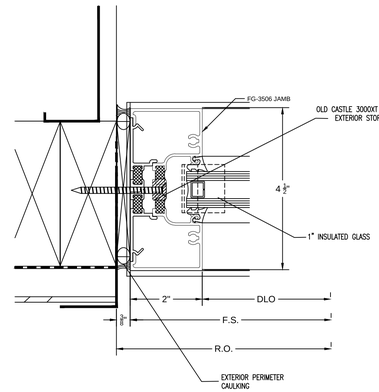

9 PLAN CUT @ JAMB
OLD CASTLE STOREFRONT
8E/A904

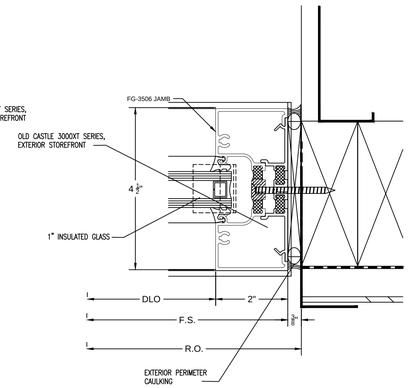

10 PLAN CUT @ JAMB
OLD CASTLE STOREFRONT
8E/A904

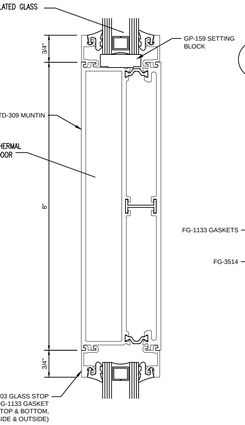

1A SECTION CUT @ MID RAIL
OLD CASTLE DOOR

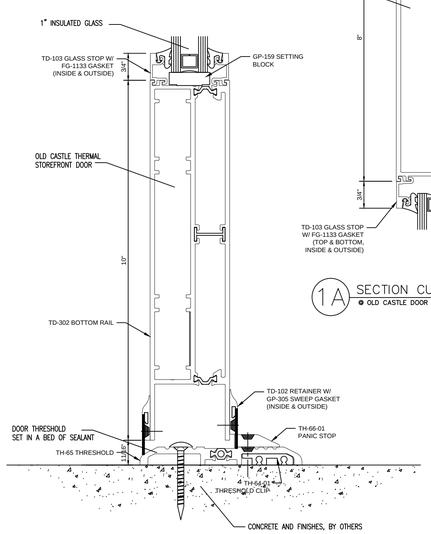

2 SECTION CUT @ BOTTOM RAIL
OLD CASTLE DOOR BOTTOM RAIL

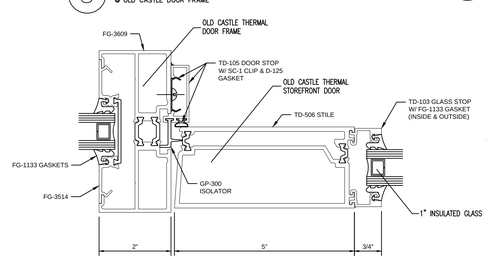

4 PLAN CUT @ DOOR JAMB
OLD CASTLE STOREFRONT DOOR

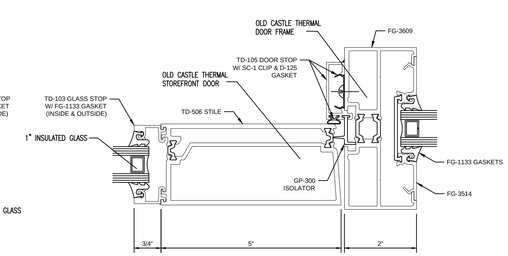

6 PLAN CUT @ DOOR JAMB
OLD CASTLE STOREFRONT DOOR

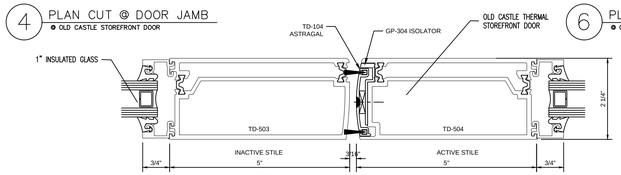

5 PLAN CUT @ MEETING OF DOORS
OLD CASTLE STOREFRONT DOOR

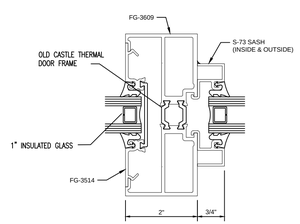

7 PLAN CUT @ JAMB
OLD CASTLE TRANSOM

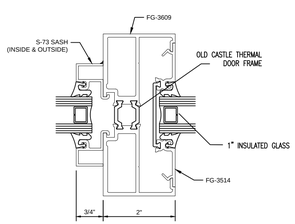

8 PLAN CUT @ JAMB
OLD CASTLE TRANSOM

NO.	REVISION/ISSUED	DATE
1	1ST SUBMITTAL	02/28/2020

PROJECT NAME & LOCATION:

A. MARIO LOIEDERMAN MIDDLE SCHOOL
PERFORMING ARTS ADDITION

12701 GOODHILL RD
SILVER SPRING, MD 20906

SHEET TITLE:

DETAILS

DRAFTSMAN:

KS DRAFTING & DESIGN, LLC.
KYLE SCHNECK
HARRISBURG, PA 17111
KYLE@KSDRAFTINGDESIGNLLC.COM
717-228-7114
KSDRAFTINGDESIGNLLC.COM

ARCHITECT:

GLAZING CONTRACTOR:

DRAWN BY: JAMES LUPICA

CHECKED BY: KYLE SCHNECK

DATE: 02/28/2020

SHEET: 407

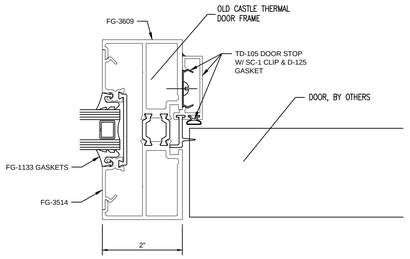

1 PLAN CUT @ DOOR JAMB
OLD CASTLE STOREFRONT DOOR

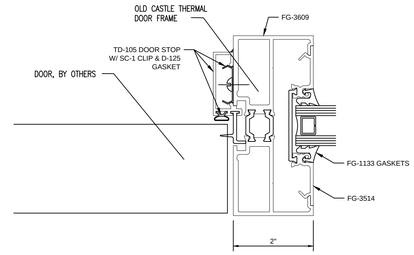

2 PLAN CUT @ DOOR JAMB
OLD CASTLE STOREFRONT DOOR

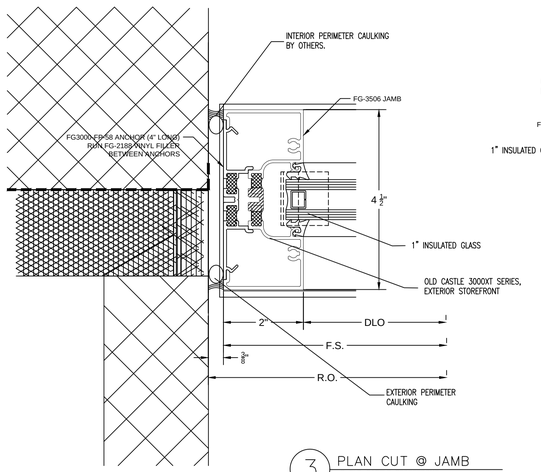

3 PLAN CUT @ JAMB
OLD CASTLE STOREFRONT
7K/A530

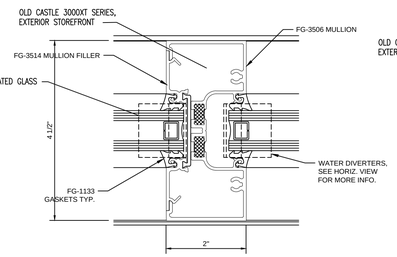

4 PLAN CUT @ VERTICAL
OLD CASTLE STOREFRONT

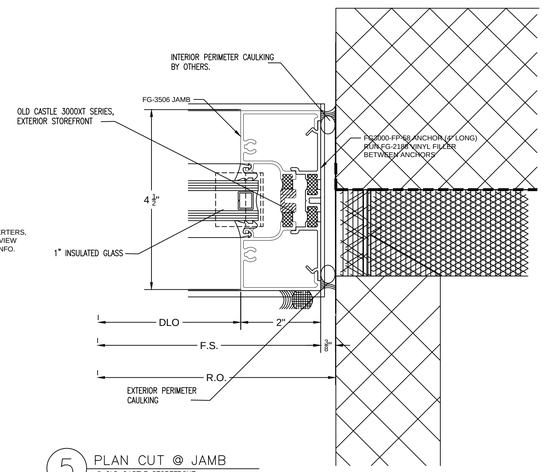

5 PLAN CUT @ JAMB
OLD CASTLE STOREFRONT
5K/A530

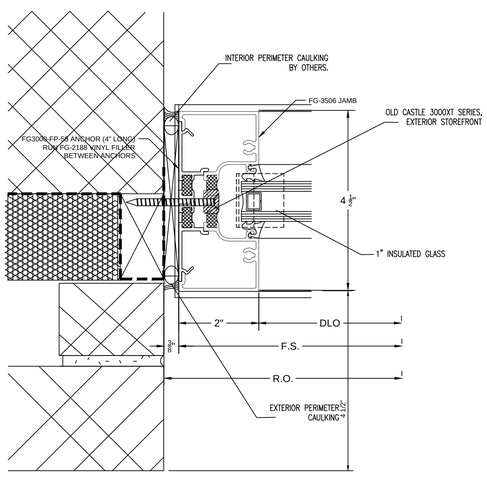

6 PLAN CUT @ JAMB
OLD CASTLE STOREFRONT
7K/A530
8K/A904

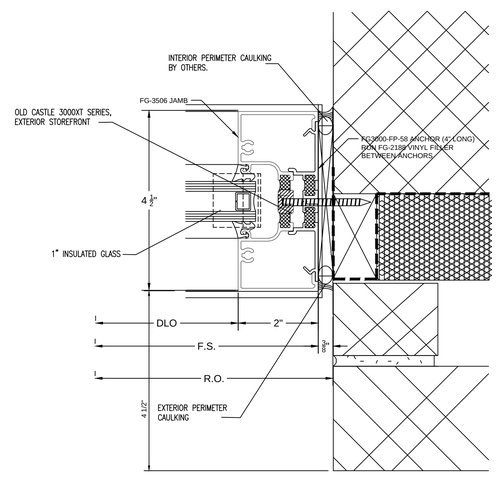

7 PLAN CUT @ JAMB
OLD CASTLE STOREFRONT
7K/A530
8K/A904

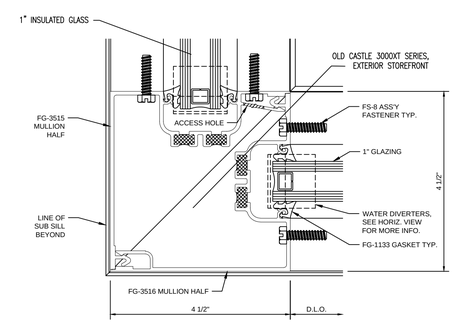

8 PLAN CUT @ CORNER
OLD CASTLE STOREFRONT

NO.	REVISION/ISSUED	DATE
1	1ST SUBMITTAL	02/28/2020

PROJECT NAME & LOCATION:

A. MARIO LOIEDERMAN MIDDLE SCHOOL
PERFORMING ARTS ADDITION

12701 GOODHILL RD
SILVER SPRING, MD 20906

SHEET TITLE:

DETAILS

DRAFTSMAN:

KS DRAFTING & DESIGN, LLC.
KYLE SCHNECK
HARRISBURG, PA 17111
KYLE@KSDRAFTINGDESIGNLLC.COM
717-228-7114
KSDRAFTINGDESIGNLLC.COM

ARCHITECT:

GLAZING CONTRACTOR:

DRAWN BY: JAMES LUPICA

CHECKED BY: KYLE SCHNECK

DATE: 02/28/2020

SHEET: 408

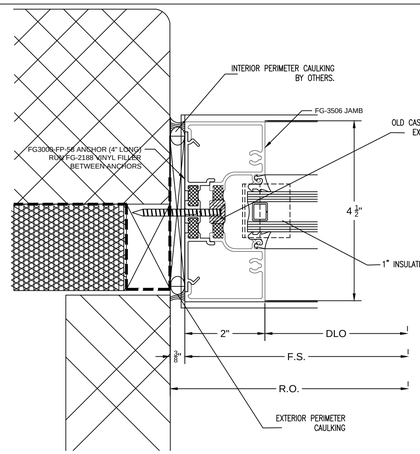

1 PLAN CUT @ JAMB
● OLD CASTLE STOREFRONT
5C/A904

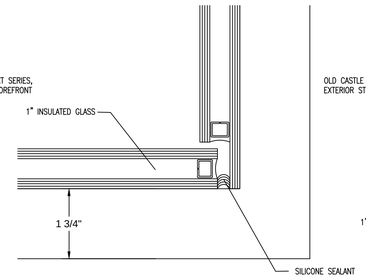

2 PLAN CUT @ SSG CORNER

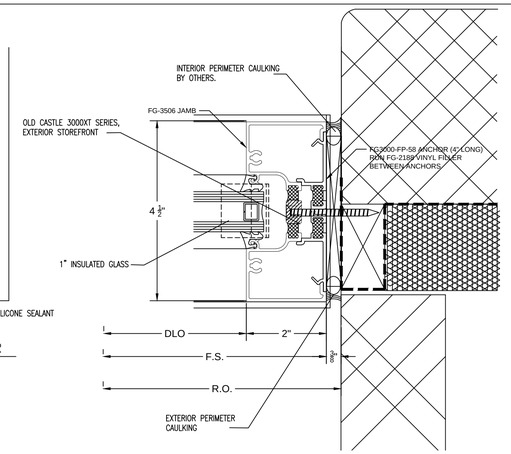

3 PLAN CUT @ JAMB
● OLD CASTLE STOREFRONT
5C/A904

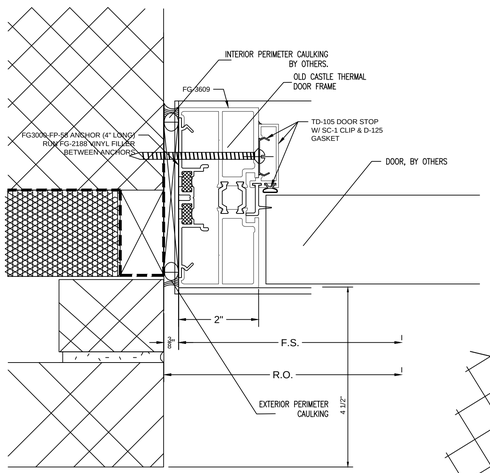

4 PLAN CUT @ DOOR JAMB
● OLD CASTLE STOREFRONT
8K/A904

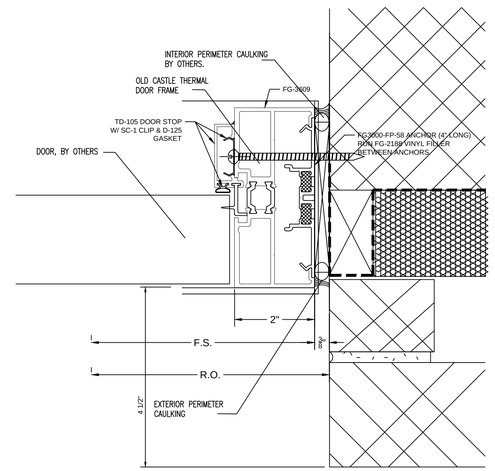

5 PLAN CUT @ DOOR JAMB
● OLD CASTLE STOREFRONT
8K/A904

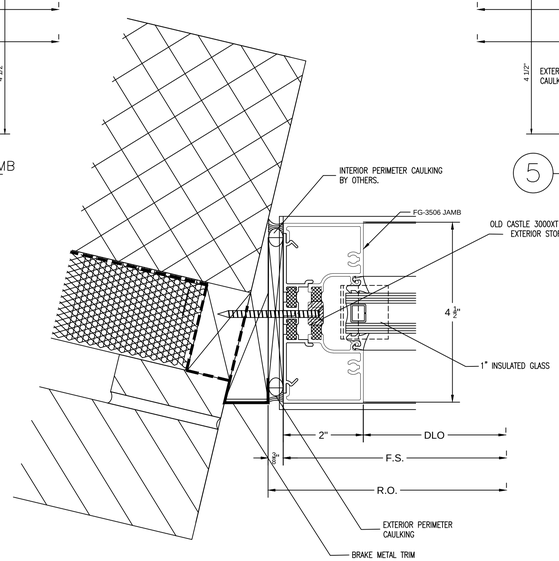

6 PLAN CUT @ JAMB
● OLD CASTLE STOREFRONT
2A/A904

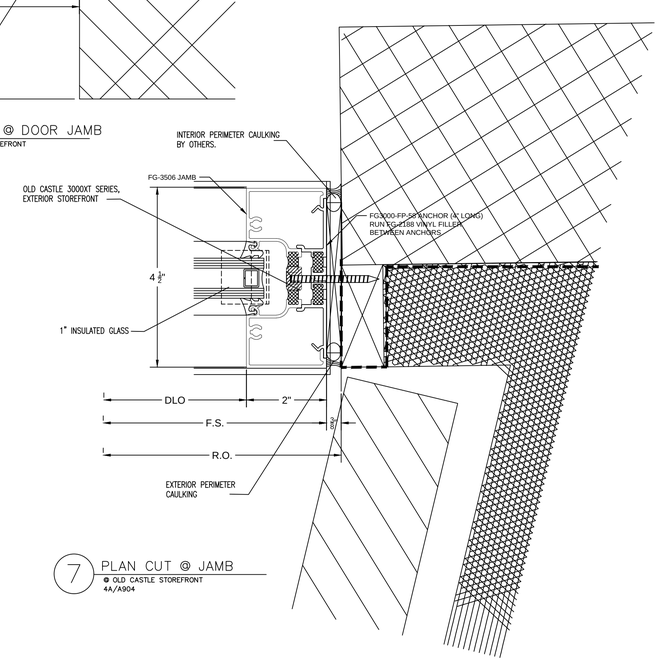

7 PLAN CUT @ JAMB
● OLD CASTLE STOREFRONT
4A/A904

NO.	REVISION/ISSUED	DATE
1	1ST SUBMITTAL	02/28/2020

PROJECT NAME & LOCATION:

A. MARIO LOIEDERMAN MIDDLE SCHOOL
PERFORMING ARTS ADDITION

12701 GOODHILL RD
SILVER SPRING, MD 20906

SHEET TITLE:

DETAILS

DRAFTSMAN:

KS DRAFTING & DESIGN, LLC.
KYLE SCHNECK
HARRISBURG, PA 17111
KYLE@KSDRAFTINGDESIGNLLC.COM
717-228-7114
KSDRAFTINGDESIGNLLC.COM

ARCHITECT:

GLAZING CONTRACTOR:

DRAWN BY: JAMES LUPICA

CHECKED BY: KYLE SCHNECK

DATE: 02/28/2020

SHEET: 409

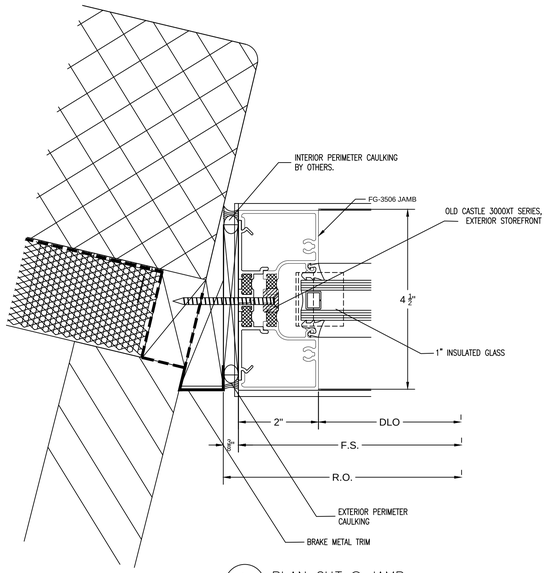

1 PLAN CUT @ JAMB
OLD CASTLE STOREFRONT
4C/A904

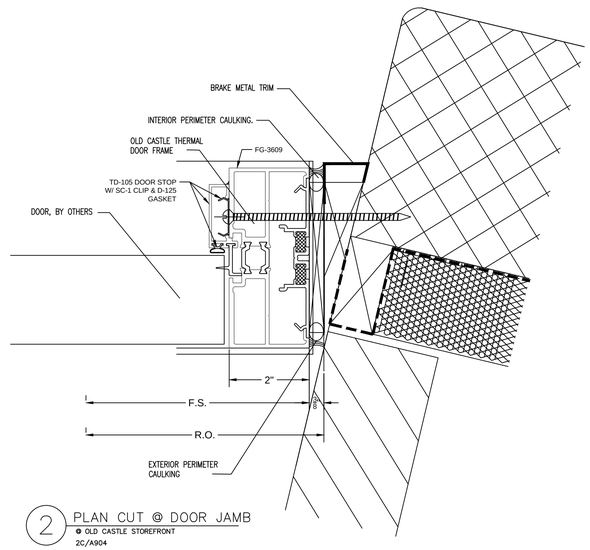

2 PLAN CUT @ DOOR JAMB
OLD CASTLE STOREFRONT
2C/A904

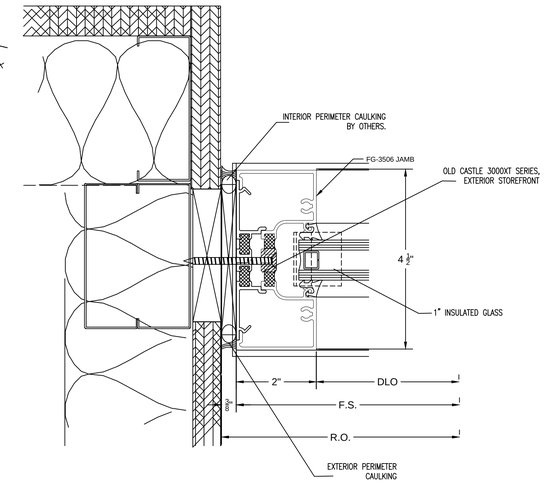

4 PLAN CUT @ JAMB
OLD CASTLE STOREFRONT
9F/A530

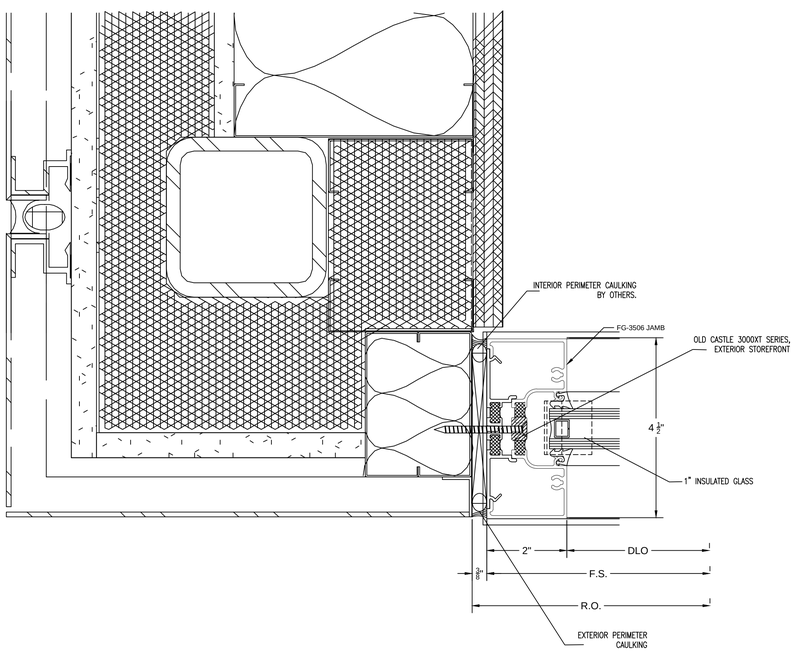

3 PLAN CUT @ JAMB
OLD CASTLE STOREFRONT
9F/A530

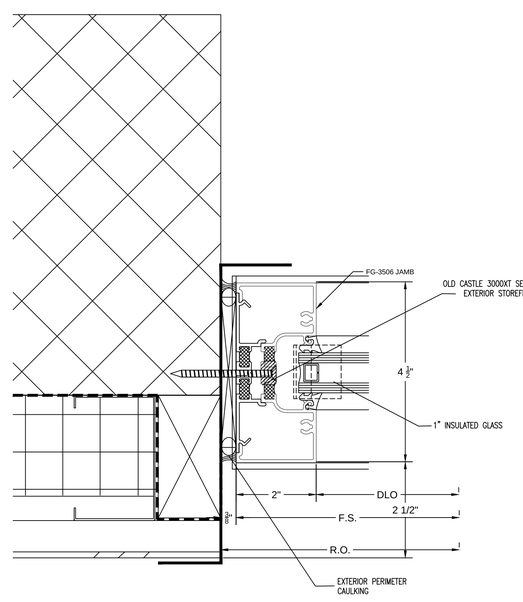

5 PLAN CUT @ JAMB
OLD CASTLE STOREFRONT
5E/A904

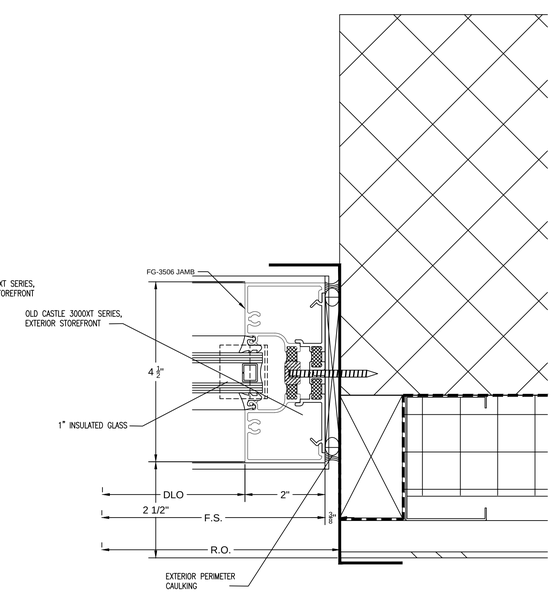

6 PLAN CUT @ JAMB
OLD CASTLE STOREFRONT
5E/A904

NO.	REVISION/ISSUED	DATE
1	1ST SUBMITTAL	02/28/2020

PROJECT NAME & LOCATION:

A. MARIO LOIEDERMAN MIDDLE SCHOOL
PERFORMING ARTS ADDITION

12701 GOODHILL RD
SILVER SPRING, MD 20906

SHEET TITLE:

DETAILS

DRAFTSMAN:

KS DRAFTING & DESIGN, LLC.
KYLE SCHNECK
HARRISBURG, PA 17111
KYLE@KSDRAFTINGDESIGNLLC.COM
717-228-7114
KSDRAFTINGDESIGNLLC.COM

ARCHITECT:

GLAZING CONTRACTOR:

DRAWN BY: JAMES LUPICA

CHECKED BY: KYLE SCHNECK

DATE: 02/28/2020

SHEET: 410

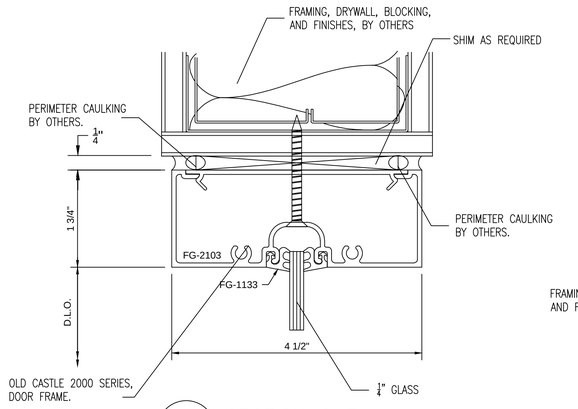

1 SECTION CUT
@ INTERIOR STOREFRONT

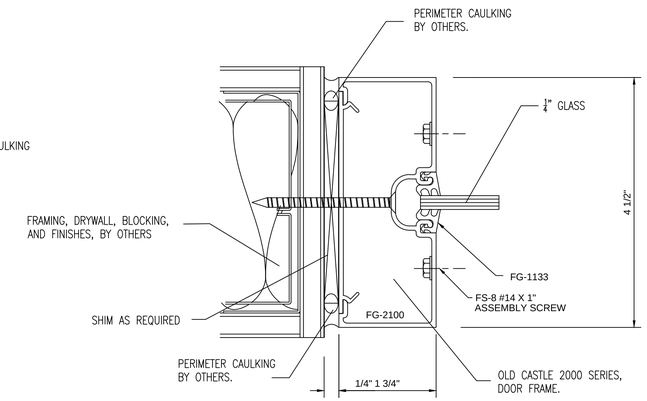

4 PLAN CUT
@ INTERIOR STOREFRONT

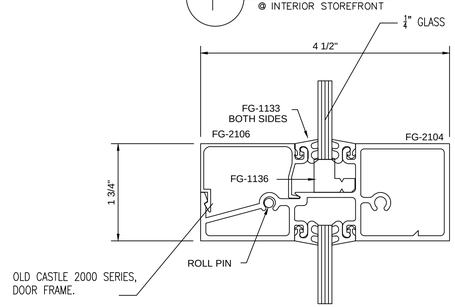

2 SECTION CUT
@ INTERIOR STOREFRONT

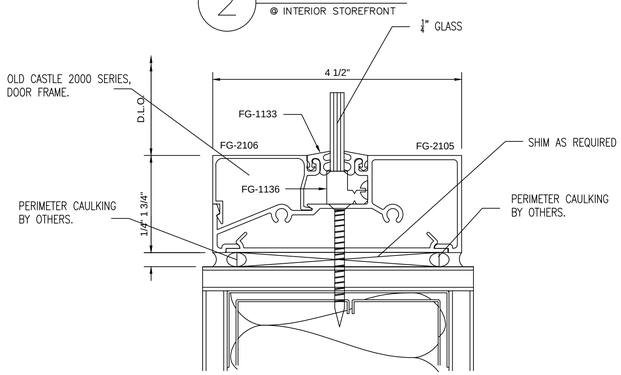

3 SECTION CUT
@ INTERIOR STOREFRONT

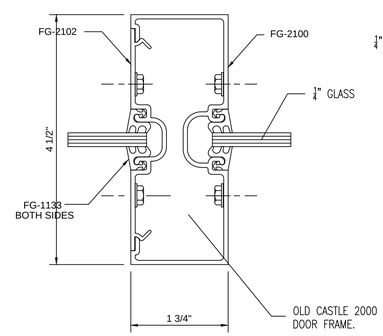

5 PLAN CUT
@ INTERIOR STOREFRONT

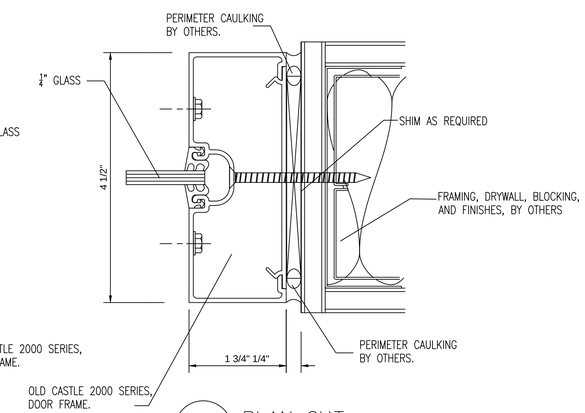

6 PLAN CUT
@ INTERIOR STOREFRONT

NO.	REVISION/ISSUED	DATE
1	1ST SUBMITTAL	02/28/2020

PROJECT NAME & LOCATION:

A. MARIO LOIEDERMAN MIDDLE SCHOOL
PERFORMING ARTS ADDITION

12701 GOODHILL RD
SILVER SPRING, MD 20906

SHEET TITLE:

DETAILS

DRAFTSMAN:

KS DRAFTING & DESIGN, LLC.
KYLE SCHNECK
HARRISBURG, PA 17111
KYLE@KSDRAFTINGDESIGNLLC.COM
717-228-7114
KSDRAFTINGDESIGNLLC.COM

ARCHITECT:

GLAZING CONTRACTOR:

DRAWN BY: JAMES LUPICA

CHECKED BY: KYLE SCHNECK

DATE: 02/28/2020

SHEET: 411