INFORMATION AVAILABLE TO PREPARE DRAWINGS

ARCHITECTURAL DRAWINGS DATED 02/06/2019

NOTE TO ARCHITECT

MEMO DATED 12/13/19 NOTED G3 TYPE DOOR FOR DOOR # 117A, PLEASE CONFIRM IF THIS WILL BE A GLASS BARN DOOR

Door to be swing style as indicated on HKS drawings. 2

12" BACK TO BACK OFFSET PULLS CALLED OUT FOR GLASS SWING DOOR AND SLIDING DOORS, PLEASE CONFIRM.

GENERAL NOTES

1.) LIMITATIONS: THESE DRAWINGS REPRESENT AN INTERPRETATION OF ARCHITECTURAL INFORMATION MADE AVAILABLE TO KS DRAFTING & DESIGN, LLC. KS DRAFTING & DESIGN, LLC. MAKES NO REPRESENTATION OR WARRANTY TO THE PERFORMANCE OR COMPLETENESS OF THE ARCHITECTURAL DETAILS OF THE SURROUNDING AREAS.

2.) CONFIRMATION: ANY LISTED TOLERANCES, DIMENSIONS, DEFLECTION, ANCHORAGE, REFERENCES, AND FUNCTIONAL PERFORMANCE REQUIREMENTS SHALL BE CONFIRMED WITH THE ARCHITECT, AND VALIDATED BY FIELD MEASUREMENTS TO ENSURE SIZING, PERFORMANCE COMPLIANCE, AND ARCHITECTURAL INTENT.

2

4.) USE: KS DRAFTING & DESIGN, LLC. ASSUMES NO RESPONSIBILITY FOR THE USE OF THESE DRAWINGS BY OTHER TRADES.

5.) COMPLIANCE: ARCHITECT, ENGINEER, GENERAL CONTRACTOR, AND MISC. TRADES ARE RESPONSIBLE FOR THE SELECTION, INSTALLATION, AND ADJUSTMENT OF SYSTEMS TO ENSURE COMPLIANCE WITH ALL APPLICABLE DESIGN, ENERGY, RATING, BUILDING, AND/ OR SAFETY CODES.

6.) QUALITY OF CONSTRUCTION: ROUGH OPENINGS MAY NOT BE PLUMB, SQUARE, OR LEVEL. CONTRACTOR TO VERIFY EXISTING OPENINGS.

7.) RELEASE OF LIABILITY: THESE DRAWINGS HAVE BEEN PREPARED BY KS DRAFTING & DESIGN, LLC. FOR USE BY THE CUSTOMER. THE CUSTOMER AGREES TO ASSUME ALL LIABILITY AND ANY CLAIMS THAT MAY ARISE FROM THE USE OF, OR INFORMATION CONTAINED IN THESE DRAWINGS.

NO.	REVISION/ISSUED	DATE
1	1ST SUBMITTAL	12/23/19
2	PER COMMENTS	2/18/20

2

DOOR SCHEDULE

DOOR #	DOOR WIDTH	DOOR HEIGHT	ACTIVE LEAF	TYPE
100A	3'-0"	8'-3"	OUTSWING	SINGLE
100B	3'-0"	8'-3"	OUTSWING	SINGLE
103A	3'-0"	8'-0"	SLIDING	SINGLE
104A	3'-0"	8'-0"	SLIDING	SINGLE
108A	3'-0"	8'-0"	OUTSWING	SINGLE
108B	3'-0"	8'-0"	OUTSWING	SINGLE
111A	3'-0"	8'-0"	SLIDING	SINGLE
117A	3'-0"	8'-0"	INSWING	SINGLE
117B	3'-0"	8'-0"	INSWING	SINGLE
130A	3'-0"	8'-0"	SLIDING	SINGLE
131A	3'-0"	8'-0"	INSWING	SINGLE
159A	3'-0"	8'-0"	SLIDING	SINGLE
160A	3'-0"	8'-0"	SLIDING	SINGLE
163A	3'-0"	8'-0"	OUTSWING	SINGLE
164A	3'-0"	8'-0"	OUTSWING	SINGLE
173A	3'-0"	8'-0"	SLIDING	SINGLE
175A	3'-0"	8'-0"	INSWING	SINGLE
175B	3'-0"	8'-0"	INSWING	SINGLE
179A	3'-0"	8'-0"	SLIDING	SINGLE
180A	3'-0"	8'-0"	SLIDING	SINGLE
186A	3'-0"	8'-0"	SWING	SINGLE
186B	3'-0"	8'-0"	SWING	SINGLE
191A	3'-0"	8'-0"	SLIDING	SINGLE
193A	3'-0"	8'-0"	SLIDING	SINGLE
194A	3'-0"	8'-0"	SLIDING	SINGLE
195A	3'-0"	8'-0"	SLIDING	SINGLE
199A	3'-0"	8'-0"	SLIDING	SINGLE
200A	3'-0"	8'-0"	INSWING	SINGLE
201A	3'-0"	8'-0"	SLIDING	SINGLE
202A	3'-0"	8'-0"	SLIDING	SINGLE
203A	3'-0"	8'-0"	SLIDING	SINGLE
204A	3'-0"	8'-0"	SLIDING	SINGLE
211A	3'-0"	8'-0"	SLIDING	SINGLE
213A	3'-0"	7'-9"	INSWING	SINGLE
214A	3'-0"	8'-0"	SLIDING	SINGLE
216A	3'-0"	8'-0"	SLIDING	SINGLE
217A	3'-0"	8'-0"	SLIDING	SINGLE
218A	3'-0"	8'-0"	SLIDING	SINGLE
219A	3'-0"	8'-0"	SLIDING	SINGLE
220A	3'-0"	8'-0"	INSWING	SINGLE
221A	3'-0"	8'-0"	SLIDING	SINGLE
222A	3'-0"	8'-0"	SLIDING	SINGLE
223A	3'-0"	8'-0"	SLIDING	SINGLE
224A	3'-0"	8'-0"	SLIDING	SINGLE
225A	3'-0"	8'-0"	INSWING	SINGLE

SWINGING DOOR HARDWARE:
PIVOTS
12" BACK TO BACK PULL OFFSET HANDLES
CONCEALED OVERHEAD CLOSERS
1-3/4" X 4-1/2" HEADER TUBE
4" TOP + BOTTOM DOOR RAILS

SLIDING DOOR HARDWARE:
12" BACK TO BACK OFFSET PULL HANDLES
CRL 70 SLIDING DOOR
TOP TRACK + BOTTOM GUIDE

STANLEY DURAGLIDE AUTO SLIDING DOOR UNIT FOR DOORS 100A AND 100B – STANDARD LOCKING JAMB AT LATCH SIDE – STANDARD SURFACE HEADER MOUNTED TO FACE OF CURTAINWALL FRAMING

PROJECT TITLE:
FDA

ADDRESS:
10749 WEST 84TH TERRACE
LENEXA, KANSAS 66214

GLASS SCHEDULE

MARK	GLAZING DESCRIPTION AND MAKEUP		NOTES
GL-1	DESCRIPTION	1/2" CLEAR, TEMPERED	
GL-2	DESCRIPTION	1/4" CLEAR, TEMPERED	
GL-3	DESCRIPTION	1" CLEAR NON LOW E INSULATED GLASS UNIT	

FIRE-RATED FRAMES TO BE SUBMITTED UNDER SEPARATE SUBMITTAL

AUTO SLIDING DOOR UNITS TO BE SUBMITTED UNDER SEPARATE SUBMITTAL

FILM @ PANEL SCHEDULE

MARK	GLAZING DESCRIPTION AND MAKEUP		NOTES
PNL	DESCRIPTION	3M VARIA GLAZED IN PANEL	
FILM-1	DESCRIPTION	SECURITY FILM	
FILM-2	DESCRIPTION	TRANSLUCENT FILM	

1

MATERIAL SCHEDULE

PRODUCT TYPE	MANUFACTURER	SYSTEM	PROFILE DIMENSIONS	DESCRIPTION	FINISH
INTERIOR STOREFRONT	TUBELITE	E14000	2" X 4-1/2"	NON-THERMAL, CENTER SET, OUTSIDE GLAZED, SCREW SPLINE	DARK BRONZE ANODIZED
SLIDING DOORS + FIXED SIDELITES	CRL	701C	4-3/8" X 2-7/8"	BOTTOM CHANNEL DIMENSIONS: 1" X 1"	DARK BRONZE ANODIZED
INTERIOR CURTAIN WALL	TUBELITE	400TU	2-1/2 X 10"	HIGH PERFORMANCE THERMAL CURTAIN WALL	DARK BRONZE ANODIZED
CRL EZ GLAZE BUTT JOINT FILLER					

SHEET LIST

SHEET	DESCRIPTION
100	COVER SHEET
201	PARTIAL FLOOR PLAN – SECTOR 1
202	PARTIAL FLOOR PLAN – SECTOR 2
203	FRAME ELEVATIONS
204	FRAME ELEVATIONS
205	FRAME ELEVATIONS
206	FRAME ELEVATIONS
207	FRAME ELEVATIONS
208	FRAME ELEVATIONS
209	FRAME ELEVATIONS
210	FRAME ELEVATIONS
400	DETAILS
401	DETAILS
402	DETAILS
403	DETAILS
404	DETAILS

PROJECT NAME & LOCATION:
FDA
10749 WEST 84TH TERRACE
LENEXA, KANSAS 66214

SHEET TITLE:
COVER SHEET

DRAFTSMAN:
KS DRAFTING & DESIGN, LLC.
KYLE SCHNECK
HARRISBURG, PA 17111
KYLE@KSDRAFTINGDESIGNLLC.COM
717-228-7114
KSDRAFTINGDESIGNLLC.COM

ARCHITECT:

GLAZING CONTRACTOR:

DRAWN BY: KEVIN VERGARA
CHECKED BY: KYLE SCHNECK

DATE: 2/18/2020

SHEET: 100

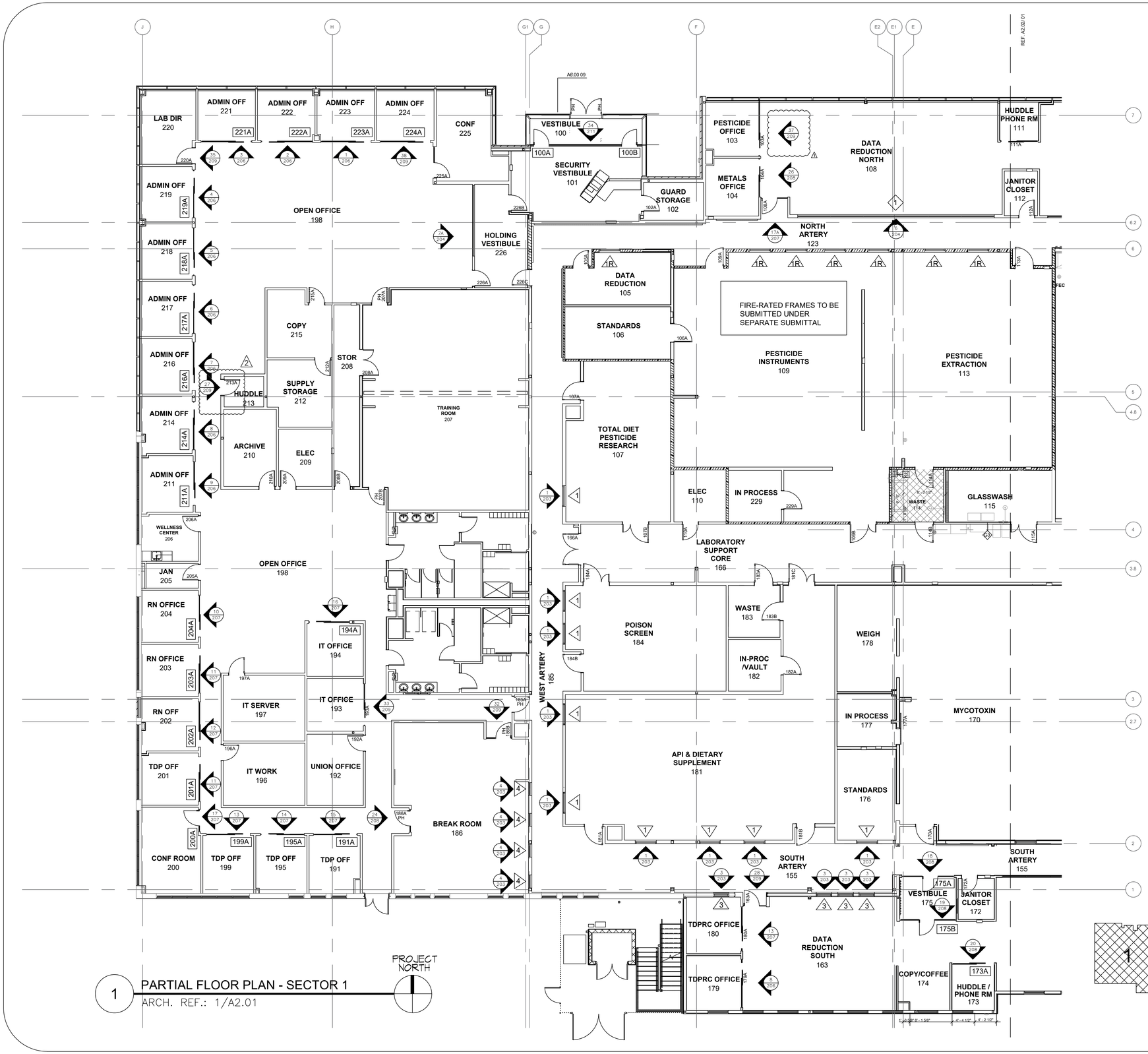

1 PARTIAL FLOOR PLAN - SECTOR 1
ARCH. REF.: 1/A2.01

AUTO SLIDING DOOR UNITS TO BE SUBMITTED UNDER SEPARATE SUBMITTAL

FIRE-RATED FRAMES TO BE SUBMITTED UNDER SEPARATE SUBMITTAL

FIRE-RATED FRAMES TO BE SUBMITTED UNDER SEPARATE SUBMITTAL

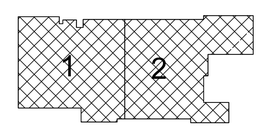

NO.	REVISION/ISSUED	DATE
1	1ST SUBMITTAL	12/23/19
2	PER COMMENTS	2/18/20

PROJECT NAME & LOCATION:
FDA
10749 WEST 84TH TERRACE
LENEXA, KANSAS 66214

SHEET TITLE:
PARTIAL FLOOR PLAN - SECTOR 1

DRAFTSMAN:
KS DRAFTING & DESIGN, LLC.
KYLE SCHNECK
HARRISBURG, PA 17111
KYLE@KSDRAFTINGDESIGNLLC.COM
717-228-7114
KSDRAFTINGDESIGNLLC.COM

ARCHITECT:

GLAZING CONTRACTOR:

DRAWN BY: KEVIN VERGARA
CHECKED BY: KYLE SCHNECK

DATE: 12/23/19
SHEET: 201

AUTO SLIDING DOOR UNITS TO BE SUBMITTED UNDER SEPARATE SUBMITTAL	FIRE-RATED FRAMES TO BE SUBMITTED UNDER SEPARATE SUBMITTAL

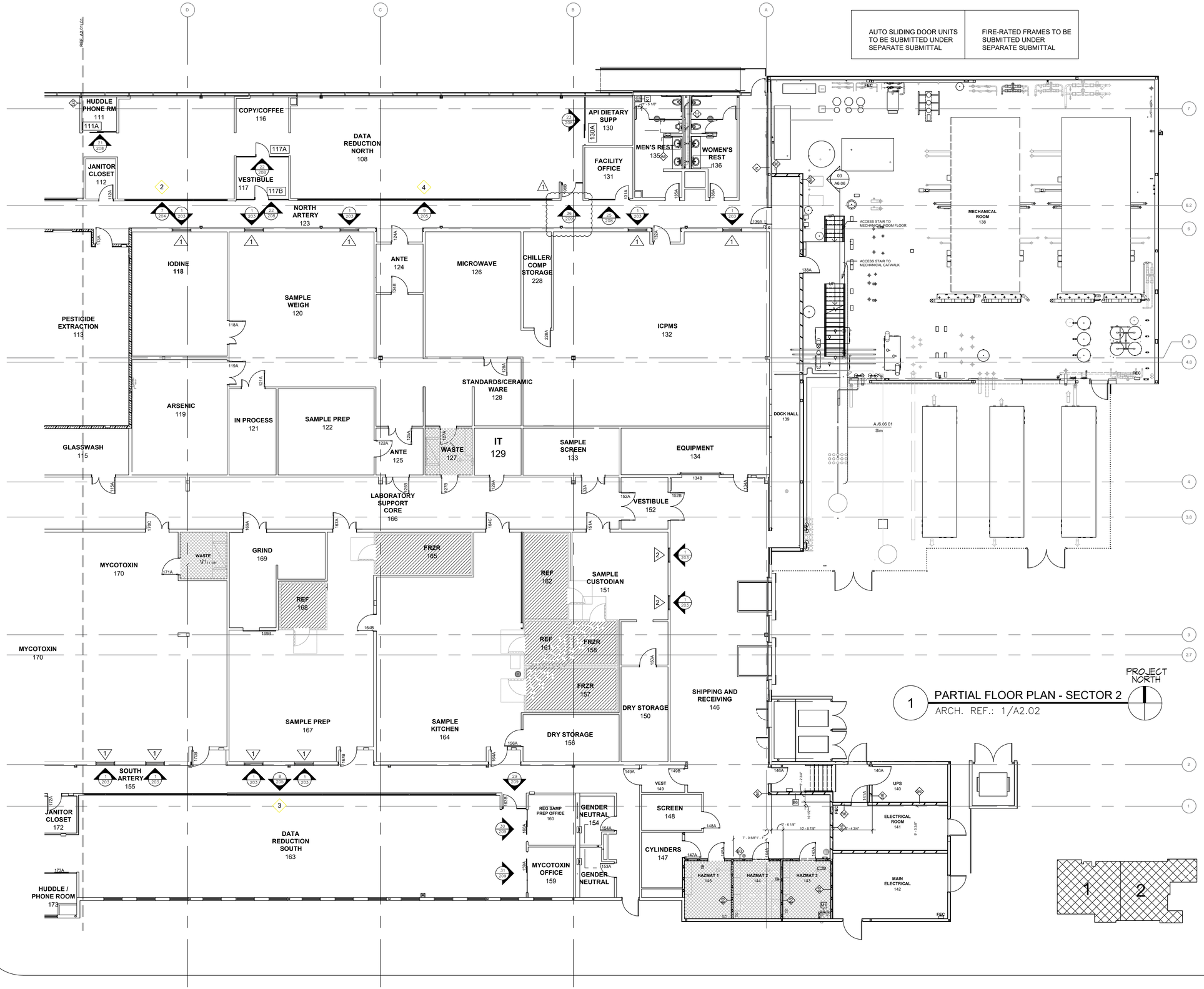

1 PARTIAL FLOOR PLAN - SECTOR 2
ARCH. REF.: 1/A2.02

NO.	REVISION/ISSUED	DATE
1	1ST SUBMITTAL	12/23/19
2	1ST REVISION	2/19/20

PROJECT NAME & LOCATION:

FDA

10749 WEST 84TH TERRACE
LENEXA, KANSAS 66214

SHEET TITLE:

PARTIAL FLOOR PLAN - SECTOR 2

DRAFTSMAN:

KS DRAFTING & DESIGN, LLC.
KYLE SCHNECK
HARRISBURG, PA 17111
KYLE@KSDRAFTINGDESIGNLLC.COM
717-228-7114
KSDRAFTINGDESIGNLLC.COM

ARCHITECT:

GLAZING CONTRACTOR:

DRAWN BY: KEVIN VERGARA

CHECKED BY: KYLE SCHNECK

DATE: 12/23/19

SHEET: 202

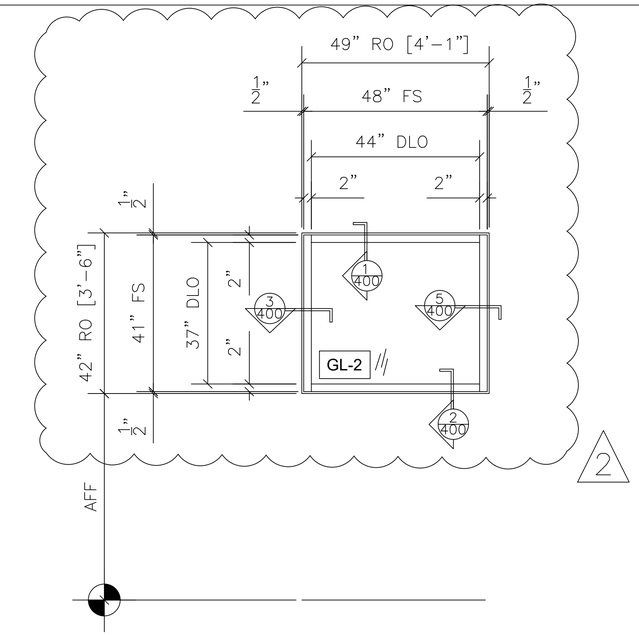

1 WINDOW TYPE 1 ELEVATION
TUBELITE E14000
INTERIOR STOREFRONT
ARCH. REF.: 1/A3.31

QTY	LOCATION
8	SOUTH ARTERY 156
5	WEST ARTERY 185
5	NORTH ARTERY 123

18 TOTAL

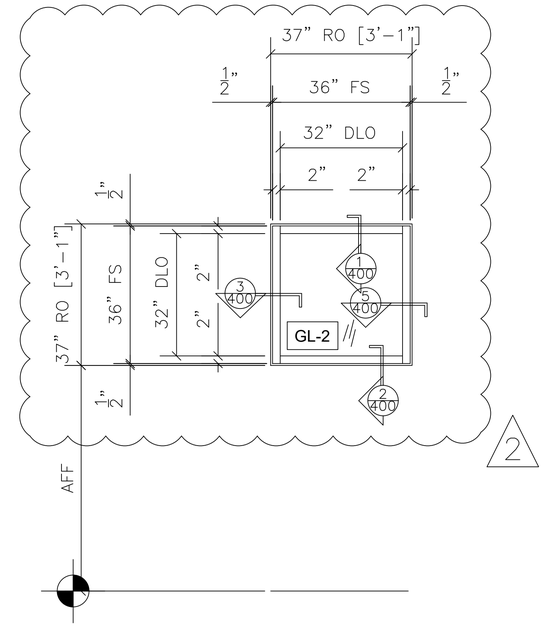

2 WINDOW TYPE 2 ELEVATION
TUBELITE E14000
INTERIOR STOREFRONT
ARCH. REF.: 2/A3.31

QTY	LOCATION
2	SAMPLE CUSTODIAN 151

2 TOTAL

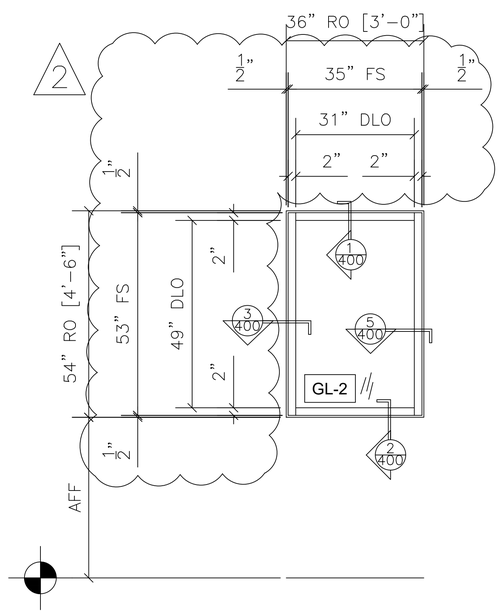

3 WINDOW TYPE 3 ELEVATION
TUBELITE E14000
INTERIOR STOREFRONT
ARCH. REF.: 3/A3.31

QTY	LOCATION
1	TDPRC OFFICE 180
3	DATA REDUCTION SOUTH 163

4 TOTAL

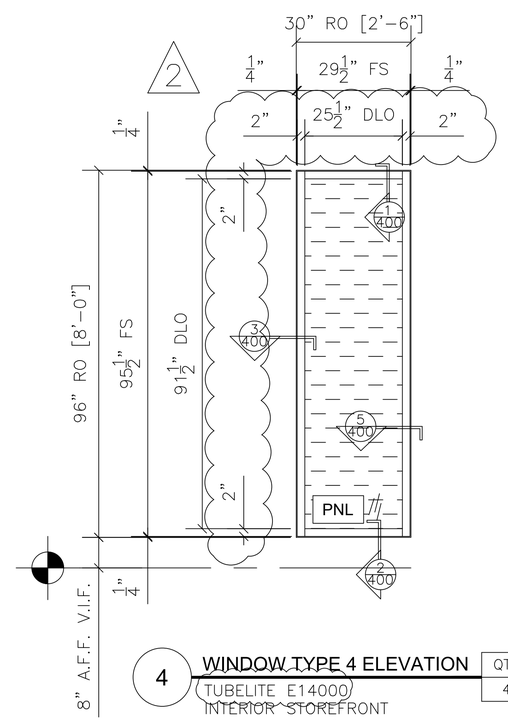

4 WINDOW TYPE 4 ELEVATION
TUBELITE E14000
INTERIOR STOREFRONT
ARCH. REF.: 8/A3.31

QTY	LOCATION
4	BREAK ROOM 186

4 TOTAL

NO.	REVISION/ISSUED	DATE
1	1ST SUBMITTAL	12/23/19
2	PER COMMENTS	2/18/20

PROJECT NAME & LOCATION:
FDA
10749 WEST 84TH TERRACE
LENEXA, KANSAS 66214

SHEET TITLE:
FRAMING ELEVATION

DRAFTSMAN:
KS DRAFTING & DESIGN, LLC.
KYLE SCHNECK
HARRISBURG, PA 17110
KYLE@KSDRAFTINGDESIGNLLC.COM
717-228-7114
KSDRAFTINGDESIGNLLC.COM

ARCHITECT:

GLAZING CONTRACTOR:

DRAWN BY: KEVIN VERGARA
CHECKED BY: KYLE SCHNECK

DATE: 12/23/19
SHEET: 203

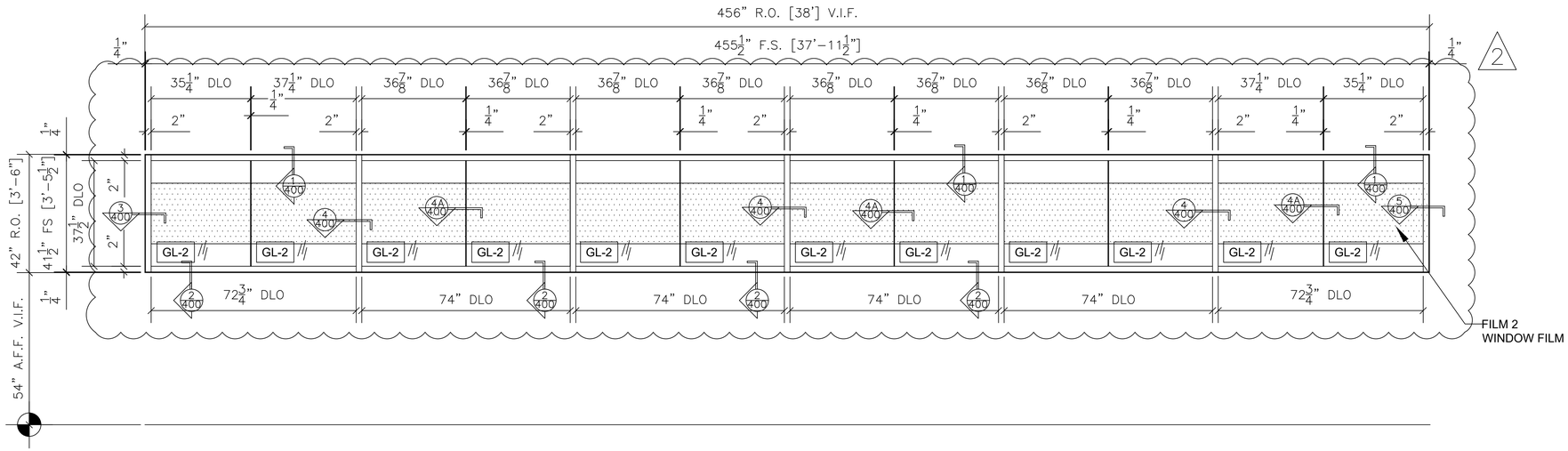

6 WINDOW FRAMING ELEVATION
TUBELITE E14000
INTERIOR STOREFRONT
ARCH. REF.: SIM. 4/A3.31

QTY	LOCATION
1	NORTH ARTERY 123

1 TOTAL

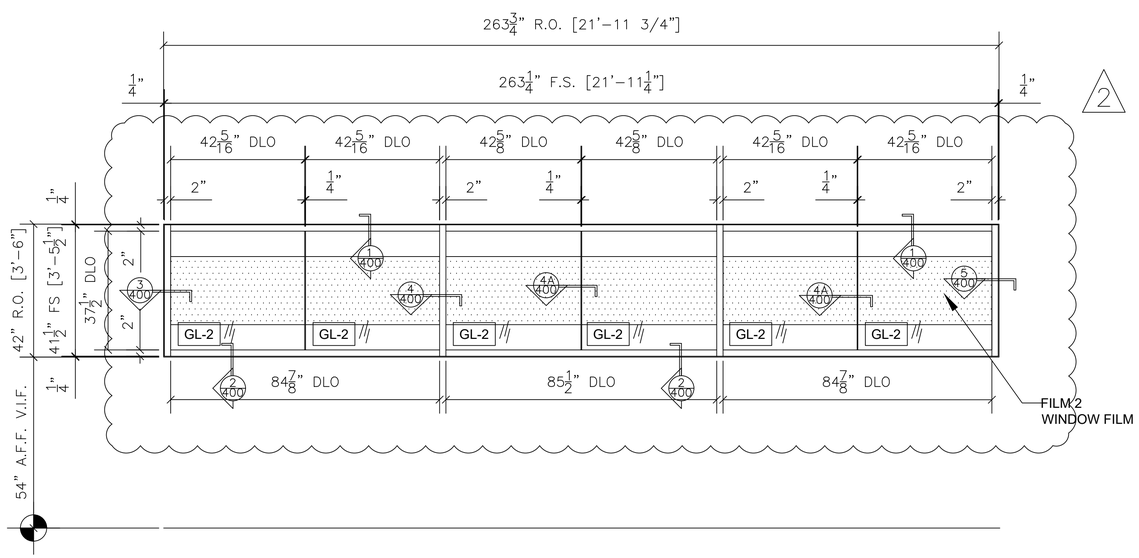

7 WINDOW FRAMING ELEVATION
TUBELITE E14000
INTERIOR STOREFRONT
ARCH. REF.: SIM. 4/A3.31

QTY	LOCATION
1	NORTH ARTERY 123

1 TOTAL

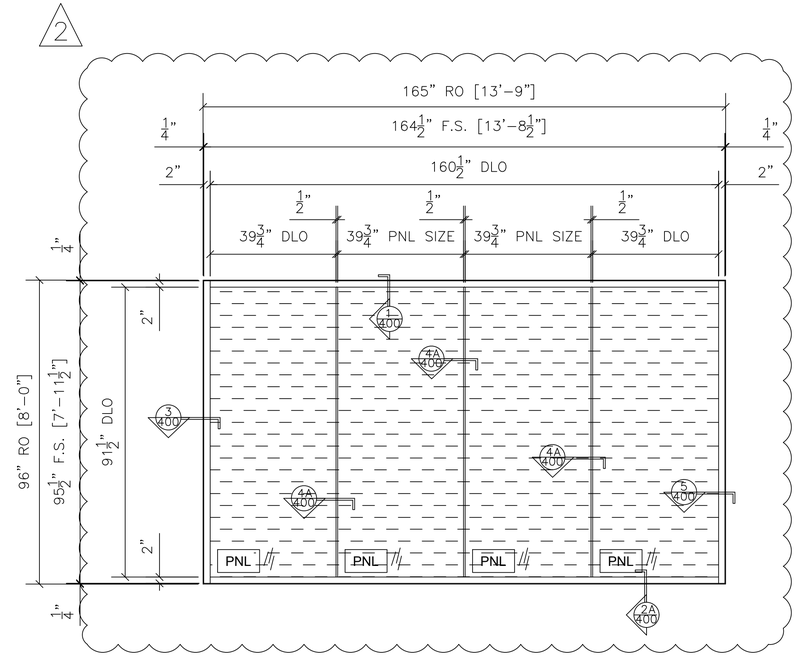

7A WINDOW TYPE 5 ELEVATION
TUBELITE E14000
INTERIOR STOREFRONT
ARCH. REF.: 8/A3.31

QTY	LOCATION
1	HOLDING VESTIBULE 226

1 TOTAL

NO.	REVISION/ISSUED	DATE
1	1ST SUBMITTAL	12/23/19
2	PER COMMENTS	2/18/20

PROJECT NAME & LOCATION:
FDA
10749 WEST 84TH TERRACE
LENEXA, KANSAS 66214

SHEET TITLE:
FRAMING ELEVATION

DRAFTSMAN:
KS DRAFTING & DESIGN, LLC.
KYLE SCHNECK
HARRISBURG, PA 17110
KYLE@KSDRAFTINGDESIGNLLC.COM
717-228-7114
KSDRAFTINGDESIGNLLC.COM

ARCHITECT:

GLAZING CONTRACTOR:

DRAWN BY: KEVIN VERGARA
CHECKED BY: KYLE SCHNECK

DATE: 12/23/19

SHEET: 204

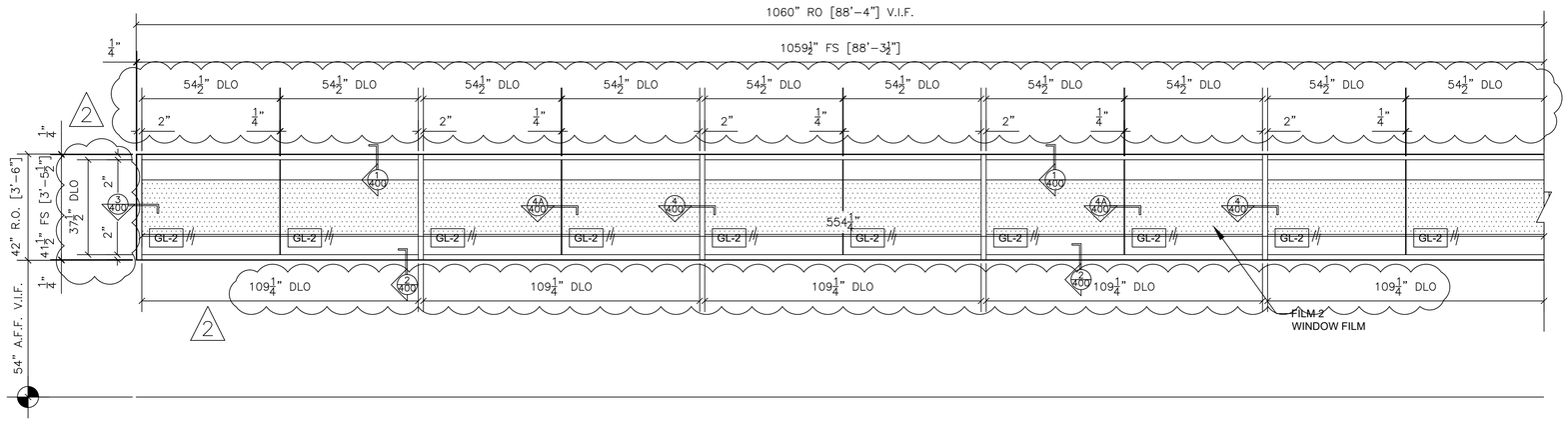

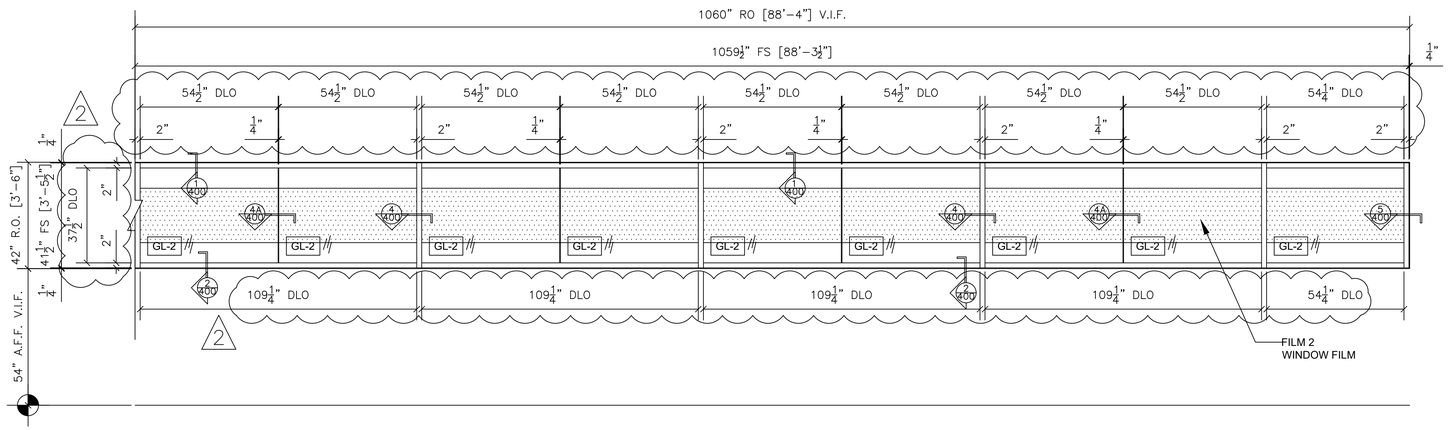

8 WINDOW FRAMING ELEVATION
TUBELITE E14000
INTERIOR STOREFRONT
ARCH. REF.: SIM. 4/A3.31

QTY	LOCATION
1	SOUTH ARTERY 155

1 TOTAL

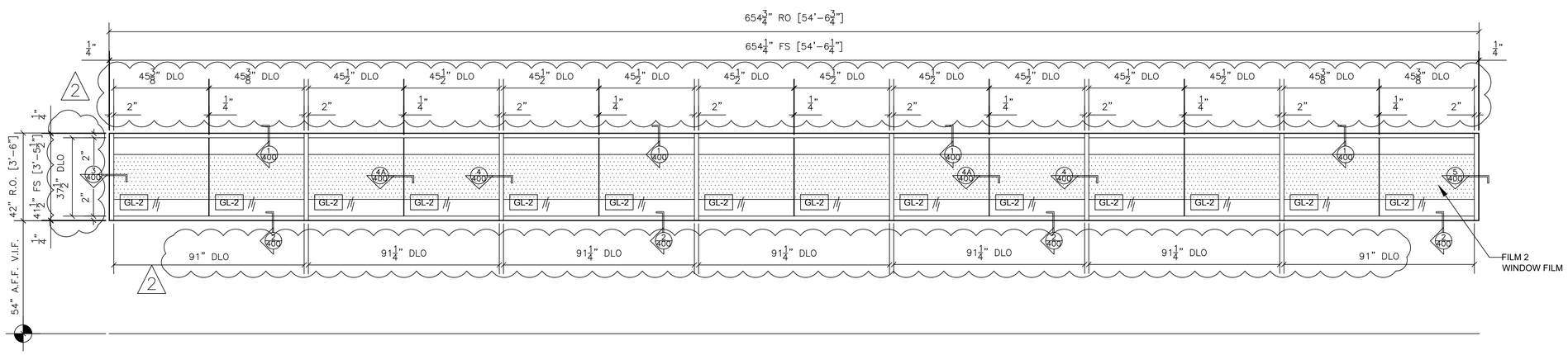

9 WINDOW FRAMING ELEVATION
TUBELITE E14000
INTERIOR STOREFRONT
ARCH. REF.: SIM. 4/A3.31

QTY	LOCATION
1	NORTH ARTERY 123

1 TOTAL

NO.	REVISION/ISSUED	DATE
1	1ST SUBMITTAL	12/23/19
2	1ST REVISION	2/19/2020

PROJECT NAME & LOCATION:

FDA

10749 WEST 84TH TERRACE
LENEXA, KANSAS 66214

SHEET TITLE:

FRAMING ELEVATION

DRAFTSMAN:

KS DRAFTING & DESIGN, LLC.
KYLE SCHNECK
HARRISBURG, PA 17110
KYLE@KSDRAFTINGDESIGNLLC.COM
717-228-7114
KSDRAFTINGDESIGNLLC.COM

ARCHITECT:

GLAZING CONTRACTOR:

DRAWN BY: KEVIN VERGARA

CHECKED BY: KYLE SCHNECK

DATE: 12/23/19

SHEET: 205

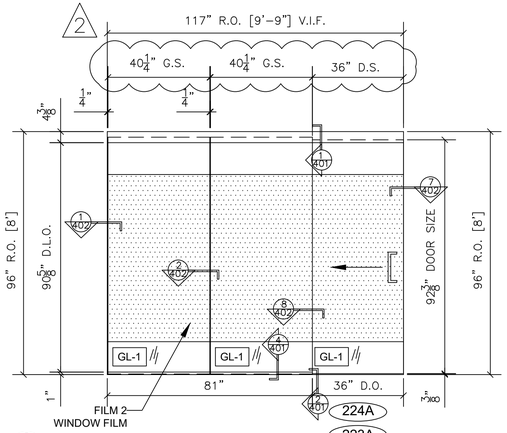

1 SLIDING DOOR SYSTEM FRAME ELEVATION
CRL 70 SLIDING DOOR UNIT
W/ SIDELITES
ARCH. REF.: 1/A2.01

QTY	LOCATION
1	ADMIN OFFICE 224
1	ADMIN OFFICE 223

2 TOTAL

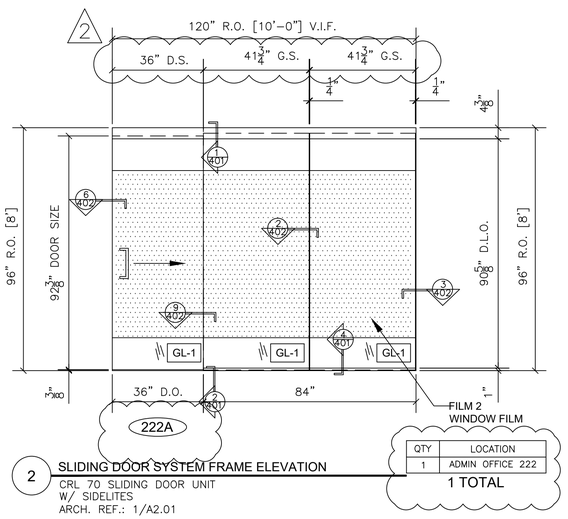

2 SLIDING DOOR SYSTEM FRAME ELEVATION
CRL 70 SLIDING DOOR UNIT
W/ SIDELITES
ARCH. REF.: 1/A2.01

QTY	LOCATION
1	ADMIN OFFICE 222

1 TOTAL

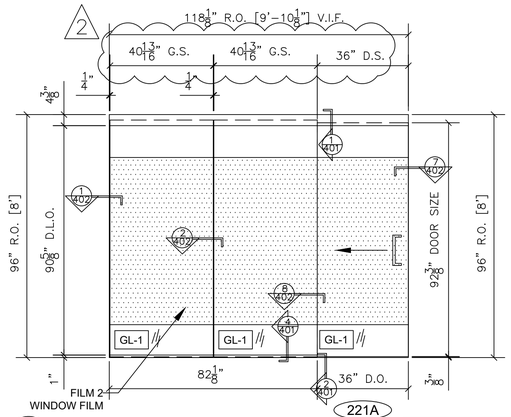

3 SLIDING DOOR SYSTEM FRAME ELEVATION
CRL 70 SLIDING DOOR UNIT
W/ SIDELITES
ARCH. REF.: 1/A2.01

QTY	LOCATION
1	ADMIN OFFICE 221

1 TOTAL

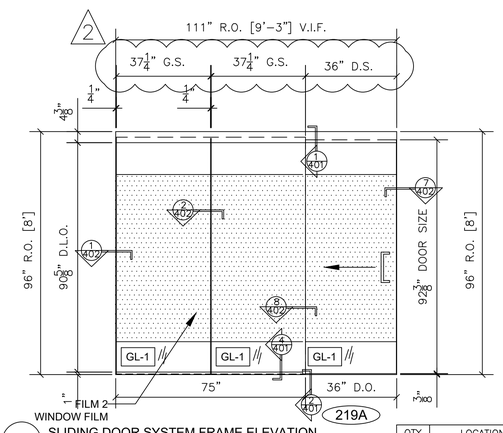

4 SLIDING DOOR SYSTEM FRAME ELEVATION
CRL 70 SLIDING DOOR UNIT
W/ SIDELITES
ARCH. REF.: 1/A2.01

QTY	LOCATION
1	ADMIN OFFICE 219

1 TOTAL

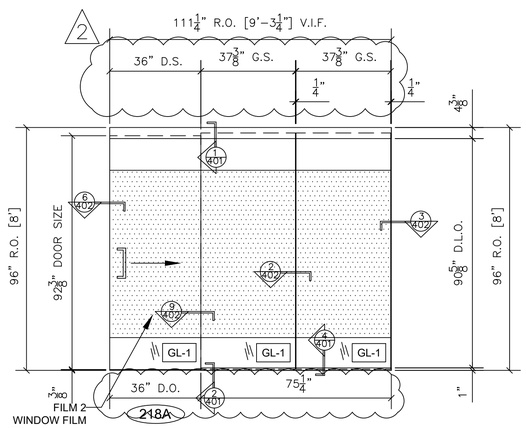

5 SLIDING DOOR SYSTEM FRAME ELEVATION
CRL 70 SLIDING DOOR UNIT
W/ SIDELITES
ARCH. REF.: 1/A2.01

QTY	LOCATION
1	ADMIN OFFICE 218

1 TOTAL

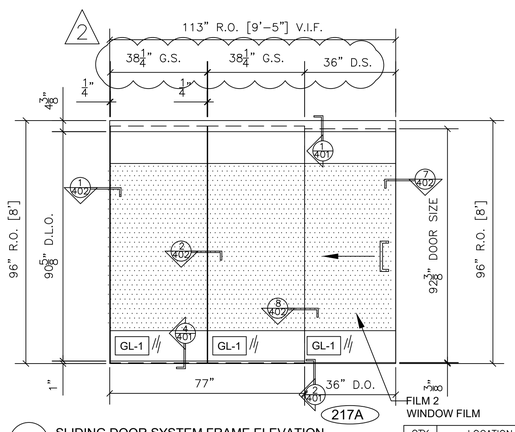

6 SLIDING DOOR SYSTEM FRAME ELEVATION
CRL 70 SLIDING DOOR UNIT
W/ SIDELITES
ARCH. REF.: 1/A2.01

QTY	LOCATION
1	ADMIN OFFICE 217

1 TOTAL

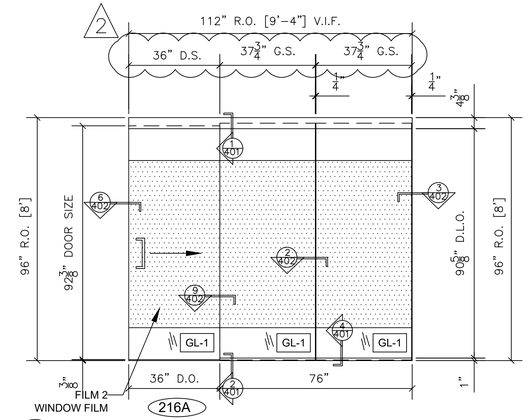

7 SLIDING DOOR SYSTEM FRAME ELEVATION
CRL 70 SLIDING DOOR UNIT
W/ SIDELITES
ARCH. REF.: 1/A2.01

QTY	LOCATION
1	ADMIN OFFICE 216

1 TOTAL

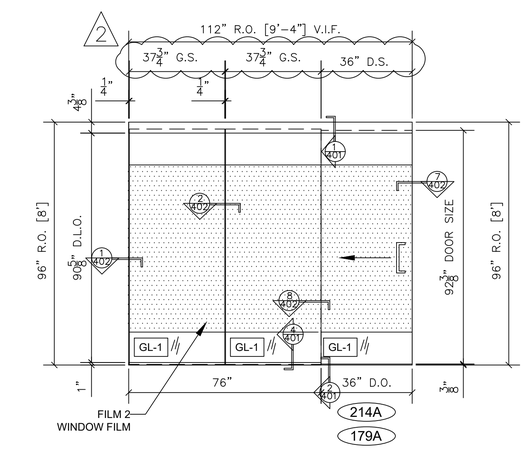

8 SLIDING DOOR SYSTEM FRAME ELEVATION
CRL 70 SLIDING DOOR UNIT
W/ SIDELITES
ARCH. REF.: 1/A2.01

QTY	LOCATION
1	ADMIN OFFICE 214
1	TDPRC OFFICE 179

2 TOTAL

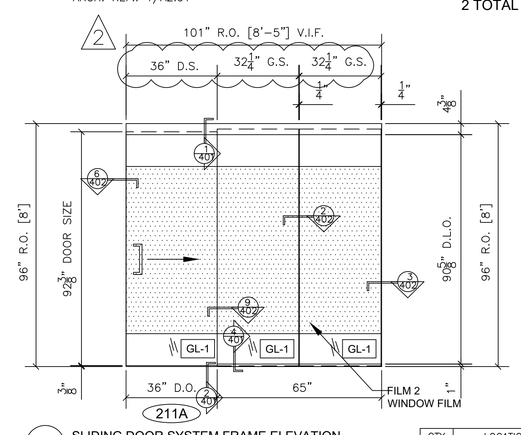

9 SLIDING DOOR SYSTEM FRAME ELEVATION
CRL 70 SLIDING DOOR UNIT
W/ SIDELITES
ARCH. REF.: 1/A2.01

QTY	LOCATION
1	RN OFFICE 211

1 TOTAL

NO.	REVISION/ISSUED	DATE
1	1ST SUBMITTAL	12/23/19
2	PER COMMENTS	2/18/20

PROJECT NAME & LOCATION:

FDA

10749 WEST 84TH TERRACE
LENEXA, KANSAS 66214

SHEET TITLE:

FRAMING ELEVATION

DRAFTSMAN:

KS DRAFTING & DESIGN, LLC.
KYLE SCHNECK
HARRISBURG, PA 17110
KYLE@KSDRAFTINGDESIGNLLC.COM
717-228-7114
KSDRAFTINGDESIGNLLC.COM

ARCHITECT:

GLAZING CONTRACTOR:

DRAWN BY: KEVIN VERGARA

CHECKED BY: KYLE SCHNECK

DATE: 12/23/19

SHEET: 206

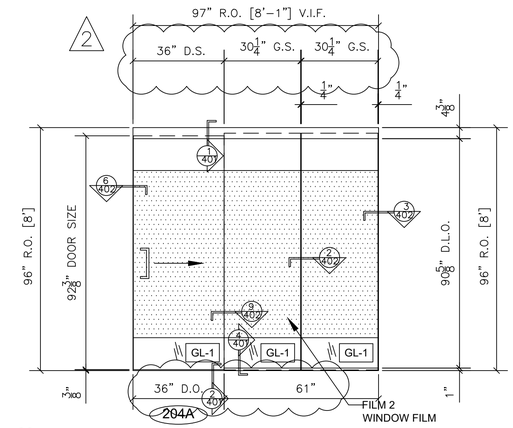

10 SLIDING DOOR SYSTEM FRAME ELEVATION
CRL 70 SLIDING DOOR UNIT
W/ SIDELITES
ARCH. REF.: 1/A2.01

QTY	LOCATION
1	ADMIN OFFICE 204

1 TOTAL

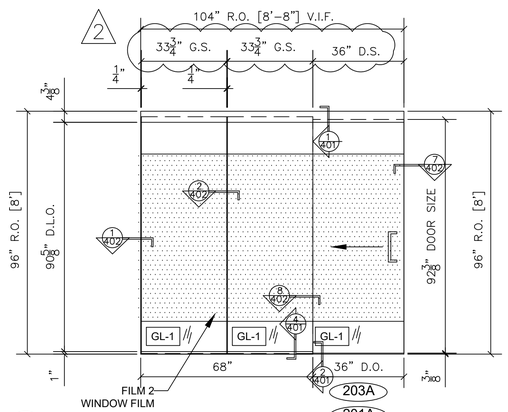

11 SLIDING DOOR SYSTEM FRAME ELEVATION
CRL 70 SLIDING DOOR UNIT
W/ SIDELITES
ARCH. REF.: 1/A2.01

QTY	LOCATION
1	RN OFFICE 203
1	TDP OFFICE 201

1 TOTAL

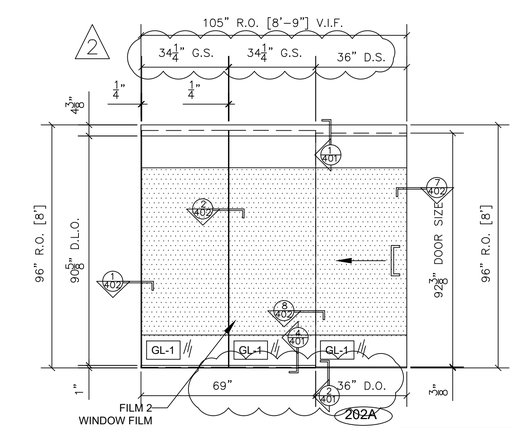

12 SLIDING DOOR SYSTEM FRAME ELEVATION
CRL 70 SLIDING DOOR UNIT
W/ SIDELITES
ARCH. REF.: 1/A2.01

QTY	LOCATION
1	RN OFFICE 202

1 TOTAL

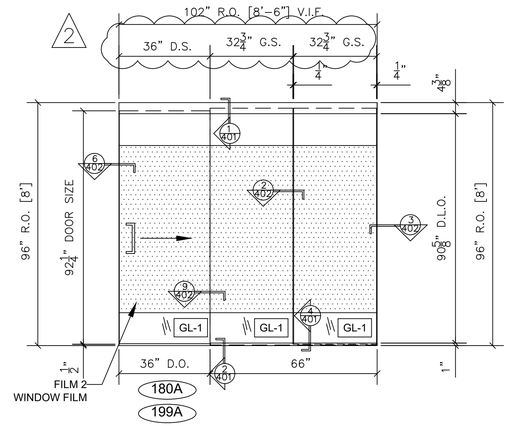

13 SLIDING DOOR SYSTEM FRAME ELEVATION
CRL 70 SLIDING DOOR UNIT
W/ SIDELITES
ARCH. REF.: 1/A2.01

QTY	LOCATION
1	TPD OFFICE 199
1	TDPRC OFFICE 180

2 TOTAL

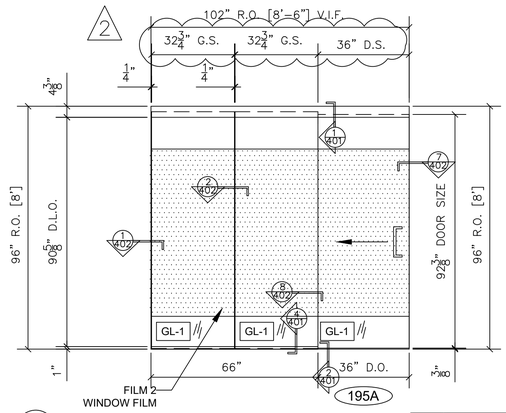

14 SLIDING DOOR SYSTEM FRAME ELEVATION
CRL 70 SLIDING DOOR UNIT
W/ SIDELITES
ARCH. REF.: 1/A2.01

QTY	LOCATION
1	TPD OFFICE 195

1 TOTAL

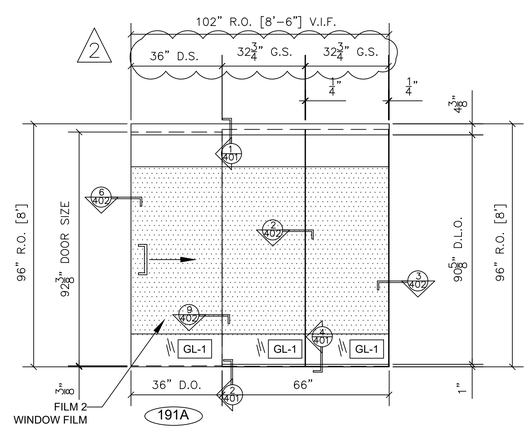

15 SLIDING DOOR SYSTEM FRAME ELEVATION
CRL 70 SLIDING DOOR UNIT
W/ SIDELITES
ARCH. REF.: 1/A2.01

QTY	LOCATION
1	TPD OFFICE 191

1 TOTAL

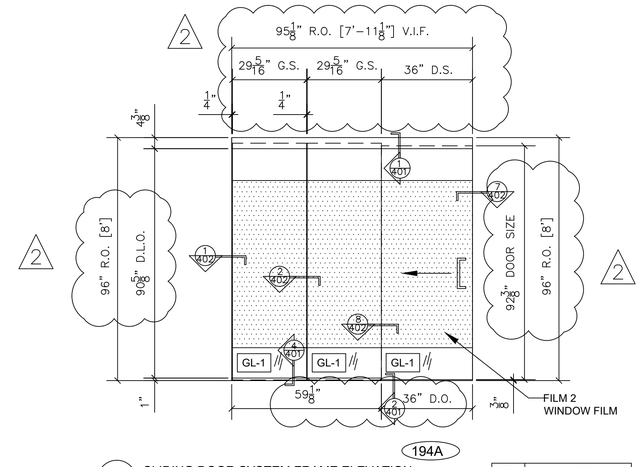

16 SLIDING DOOR SYSTEM FRAME ELEVATION
CRL 70 SLIDING DOOR UNIT
W/ SIDELITES
ARCH. REF.: 1/A2.01

QTY	LOCATION
1	IT OFFICE 194

1 TOTAL

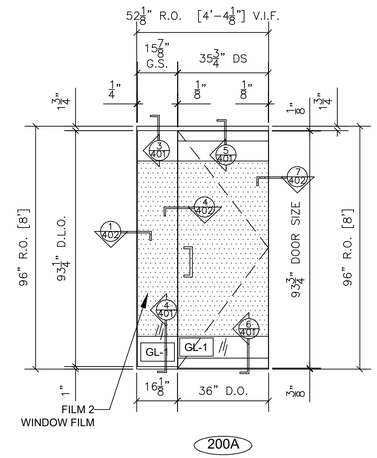

17 SWINGING DOOR SYSTEM FRAME ELEVATION
SWINGING DOOR WITH RAILS AND SIDELITE
ARCH. REF.: 1/A2.01

QTY	LOCATION
1	CONF ROOM 200

1 TOTAL

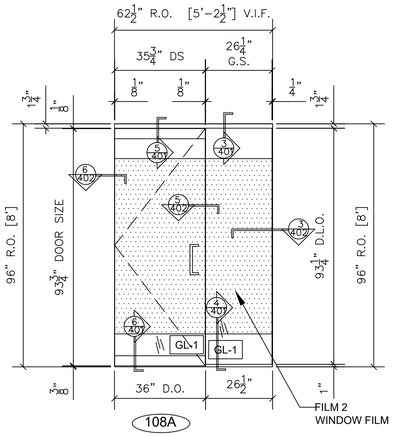

17A SWINGING DOOR SYSTEM FRAME ELEVATION
SWINGING DOOR WITH RAILS AND SIDELITE
ARCH. REF.: 1/A2.01

QTY	LOCATION
1	DATA REDUCTION NORTH

1 TOTAL

NO.	REVISION/ISSUED	DATE
1	1ST SUBMITTAL	12/23/19
2	PER COMMENTS	2/18/20

PROJECT NAME & LOCATION:
FDA
10749 WEST 84TH TERRACE
LENEXA, KANSAS 66214

SHEET TITLE:
FRAMING ELEVATION

DRAFTSMAN:
KS DRAFTING & DESIGN, LLC.
KYLE SCHNECK
HARRISBURG, PA 17110
KYLE@KSDRAFTINGDESIGNLLC.COM
717-228-7114
KSDRAFTINGDESIGNLLC.COM

ARCHITECT:

GLAZING CONTRACTOR:

DRAWN BY: KEVIN VERGARA
CHECKED BY: KYLE SCHNECK

DATE: 12/23/19
SHEET: 207

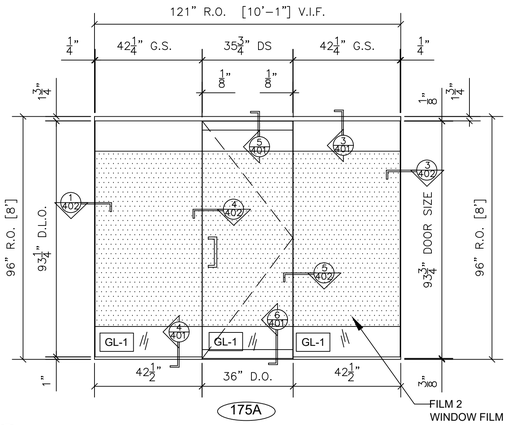

18 SWINGING DOOR SYSTEM FRAME ELEVATION
SWINGING DOOR WITH RAILS AND SIDELITES
ARCH. REF.: 1/A2.01

QTY	LOCATION
1	VESTIBULE 175

1 TOTAL

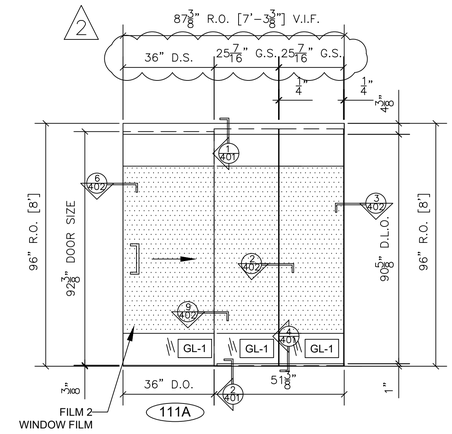

21 SLIDING DOOR SYSTEM FRAME ELEVATION
CRL 70 SLIDING DOOR UNIT
W/ SIDELITES
ARCH. REF.: 1/A2.01

QTY	LOCATION
1	HUDDLE/PHONE ROOM 111

1 TOTAL

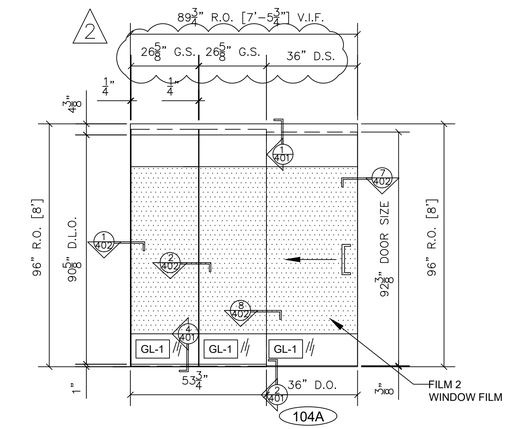

26 SLIDING DOOR SYSTEM FRAME ELEVATION
CRL 70 SLIDING DOOR UNIT
W/ SIDELITES
ARCH. REF.: 1/A2.01

QTY	LOCATION
1	METALS OFFICE 104

1 TOTAL

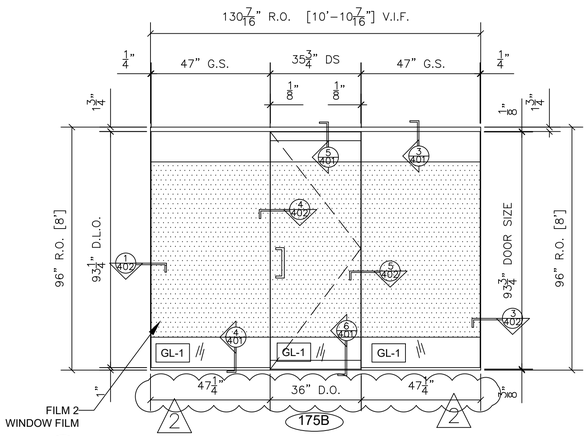

19 SWINGING DOOR SYSTEM FRAME ELEVATION
SWINGING DOOR WITH RAILS AND SIDELITES
ARCH. REF.: 1/A2.01

QTY	LOCATION
1	VESTIBULE 175

1 TOTAL

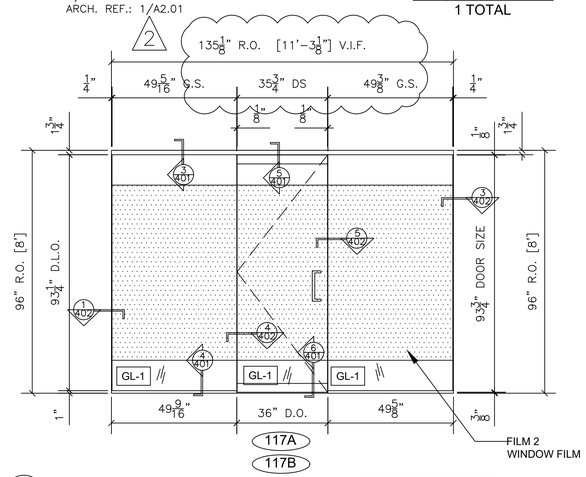

22 SWINGING DOOR SYSTEM FRAME ELEVATION
SWINGING DOOR WITH RAILS AND SIDELITES
ARCH. REF.: 1/A2.01

QTY	LOCATION
2	VESTIBULE 117

2 TOTAL

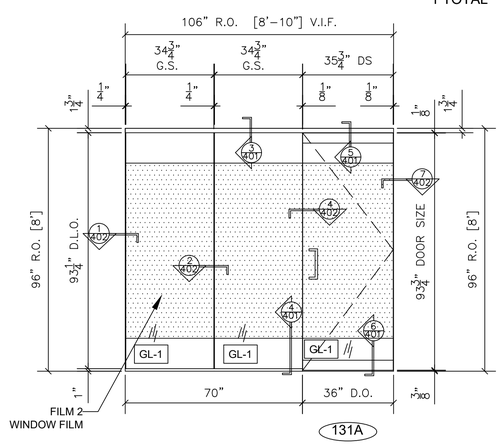

25 SWINGING DOOR SYSTEM FRAME ELEVATION
SWINGING DOOR WITH RAILS AND SIDELITE
ARCH. REF.: 1/A2.01

QTY	LOCATION
1	FACILITY OFFICE 131

1 TOTAL

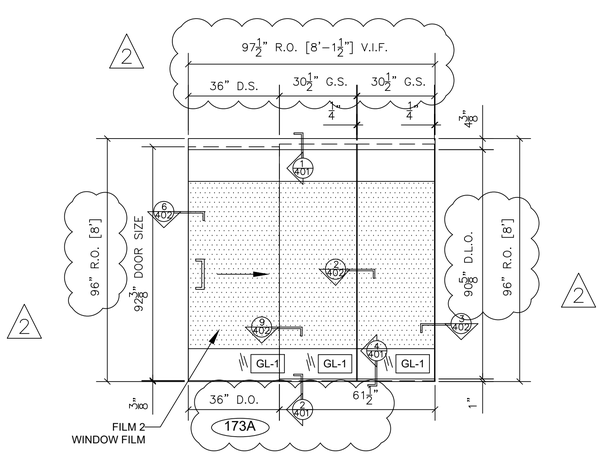

20 SLIDING DOOR SYSTEM FRAME ELEVATION
CRL 70 SLIDING DOOR UNIT
W/ SIDELITES
ARCH. REF.: 1/A2.01

QTY	LOCATION
1	HUDDLE/PHONE ROOM 173

1 TOTAL

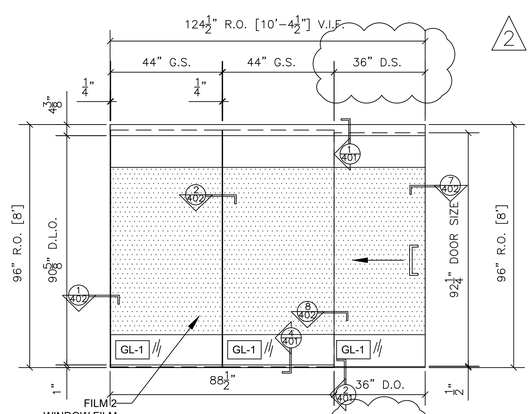

23 SLIDING DOOR SYSTEM FRAME ELEVATION
CRL 70 SLIDING DOOR UNIT
W/ SIDELITES
ARCH. REF.: 1/A2.01

QTY	LOCATION
1	API DIETARY SUPP 130

1 TOTAL

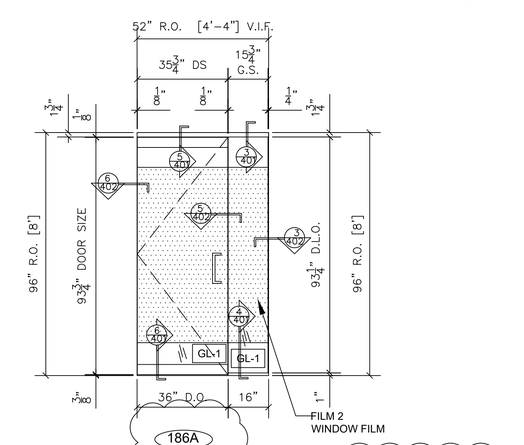

24 SWINGING DOOR SYSTEM FRAME ELEVATION
SWINGING DOOR WITH RAILS AND SIDELITE
ARCH. REF.: 1/A2.01

QTY	LOCATION
1	BRAKE ROOM 186

1 TOTAL

NO.	REVISION/ISSUED	DATE
1	1ST SUBMITTAL	12/23/19
2	PER COMMENTS	2/18/20

PROJECT NAME & LOCATION:

FDA

10749 WEST 84TH TERRACE
LENEXA, KANSAS 66214

SHEET TITLE:

FRAMING ELEVATION

DRAFTSMAN:

KS DRAFTING & DESIGN, LLC.
KYLE SCHNECK
HARRISBURG, PA 17110
KYLE@KSDRAFTINGDESIGNLLC.COM
717-228-7114
KSDRAFTINGDESIGNLLC.COM

ARCHITECT:

GLAZING CONTRACTOR:

DRAWN BY: KEVIN VERGARA

CHECKED BY: KYLE SCHNECK

DATE: 12/23/19

SHEET: 208

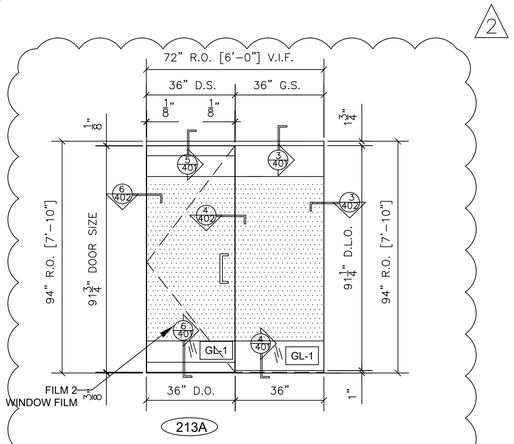

27 SLIDING DOOR SYSTEM FRAME ELEVATION
SWINGING DOOR WITH RAILS AND SIDELITE
ARCH. REF.: 1/A2.01

QTY	LOCATION
1	HUDDLE 213
1 TOTAL	

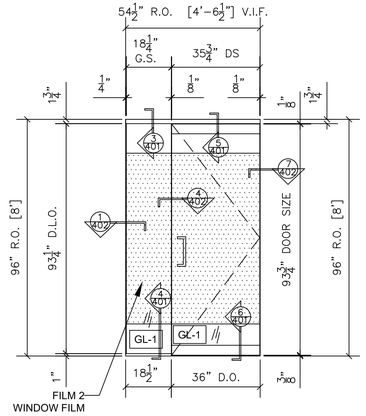

28 SWINGING DOOR SYSTEM FRAME ELEVATION
SWINGING DOOR WITH RAILS AND SIDELITE
ARCH. REF.: 1/A2.01

QTY	LOCATION
1	DATA REDUCTION SOUTH 163
1 TOTAL	

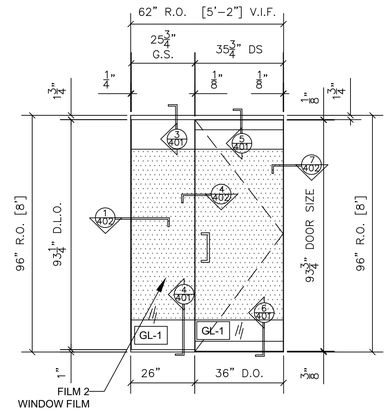

29 SWINGING DOOR SYSTEM FRAME ELEVATION
SWINGING DOOR WITH RAILS AND SIDELITE
ARCH. REF.: 1/A2.01

QTY	LOCATION
1	DATA REDUCTION SOUTH 163
1 TOTAL	

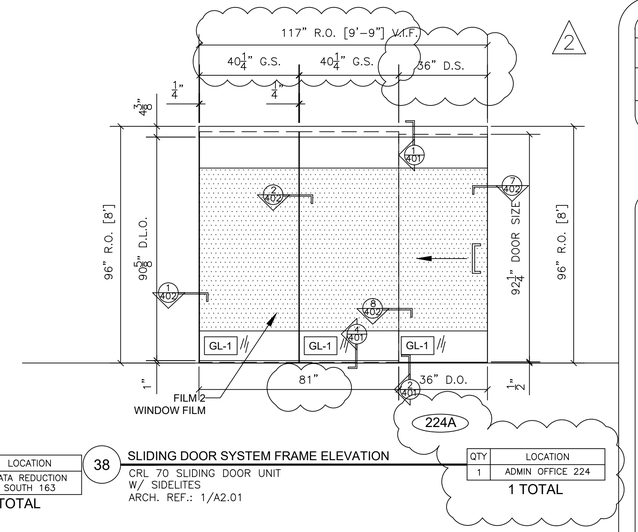

38 SLIDING DOOR SYSTEM FRAME ELEVATION
CRL 70 SLIDING DOOR UNIT
W/ SIDELITES
ARCH. REF.: 1/A2.01

QTY	LOCATION
1	ADMIN OFFICE 224
1 TOTAL	

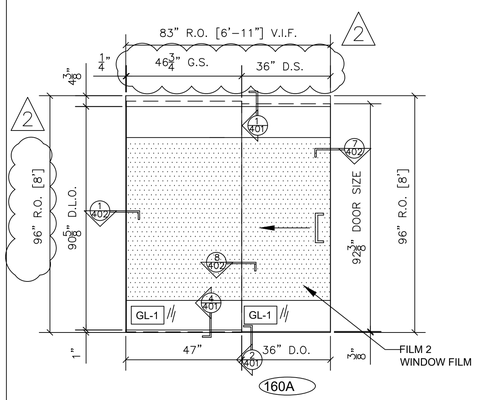

30 SLIDING DOOR SYSTEM FRAME ELEVATION
CRL 70 SLIDING DOOR UNIT
W/ SIDELITES
ARCH. REF.: 1/A2.01

QTY	LOCATION
1	REG SAMP REC OFFICE 160
1 TOTAL	

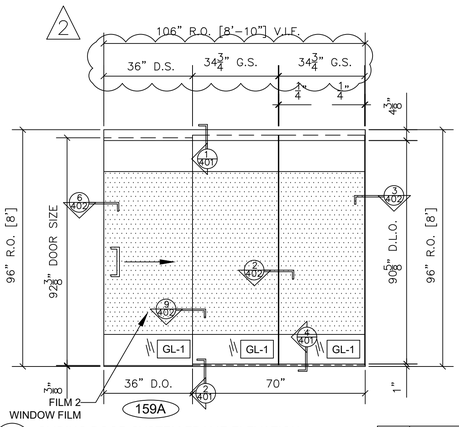

31 SLIDING DOOR SYSTEM FRAME ELEVATION
CRL 70 SLIDING DOOR UNIT
W/ SIDELITES
ARCH. REF.: 1/A2.01

QTY	LOCATION
1	MYCOTOXIN OFFICE 159
1 TOTAL	

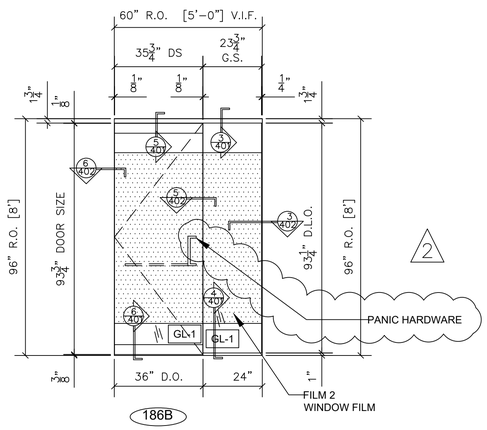

32 SWINGING DOOR SYSTEM FRAME ELEVATION
SWINGING DOOR WITH RAILS AND SIDELITE
ARCH. REF.: 1/A2.01

QTY	LOCATION
1	BREAK ROOM 186
1 TOTAL	

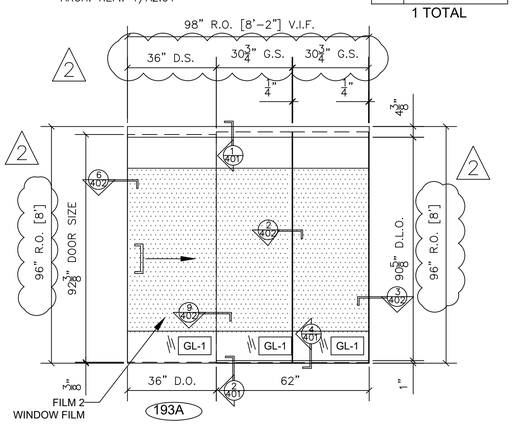

33 SLIDING DOOR SYSTEM FRAME ELEVATION
CRL 70 SLIDING DOOR UNIT
W/ SIDELITES
ARCH. REF.: 1/A2.01

QTY	LOCATION
1	IT OFFICE 193
1 TOTAL	

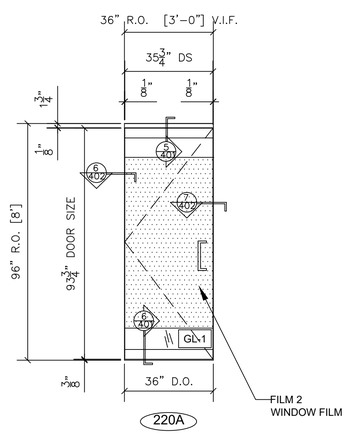

35 SWINGING DOOR SYSTEM FRAME ELEVATION
SWINGING DOOR WITH RAILS AND SIDELITE

QTY	LOCATION
1	LAB DIR 220
1 TOTAL	

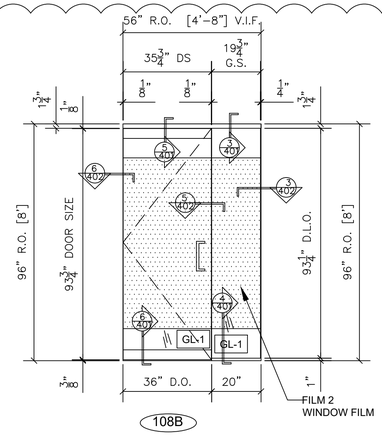

36 SWINGING DOOR SYSTEM FRAME ELEVATION
SWINGING DOOR WITH RAILS AND SIDELITE
ARCH. REF.: 1/A2.01

QTY	LOCATION
1	DATA REDUCTION NORTH
1 TOTAL	

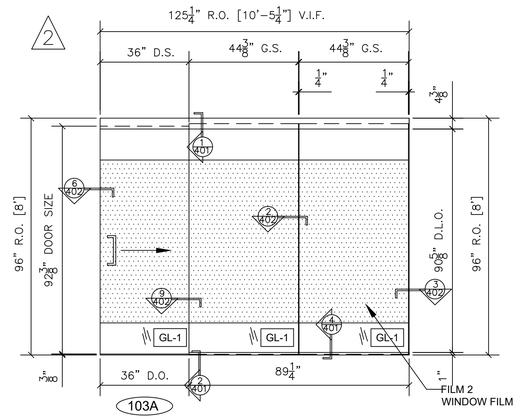

37 SLIDING DOOR SYSTEM FRAME ELEVATION
CRL 70 SLIDING DOOR UNIT
W/ SIDELITES
ARCH. REF.: 1/A2.01

QTY	LOCATION
1	PESTICIDE OFFICE 103
1 TOTAL	

NO.	REVISION/ISSUED	DATE
1	1ST SUBMITTAL	12/23/19
2	PER COMMENTS	2/19/20

PROJECT NAME & LOCATION:

FDA

10749 WEST 84TH TERRACE
LENEXA, KANSAS 66214

SHEET TITLE:

FRAMING ELEVATION

DRAFTSMAN:

KS DRAFTING & DESIGN, LLC.
KYLE SCHNECK
HARRISBURG, PA 17110
KYLE@KSDRAFTINGDESIGNLLC.COM
717-228-7114
KSDRAFTINGDESIGNLLC.COM

ARCHITECT:

GLAZING CONTRACTOR:

DRAWN BY: KEVIN VERGARA

CHECKED BY: KYLE SCHNECK

DATE: 12/23/19

SHEET: 209

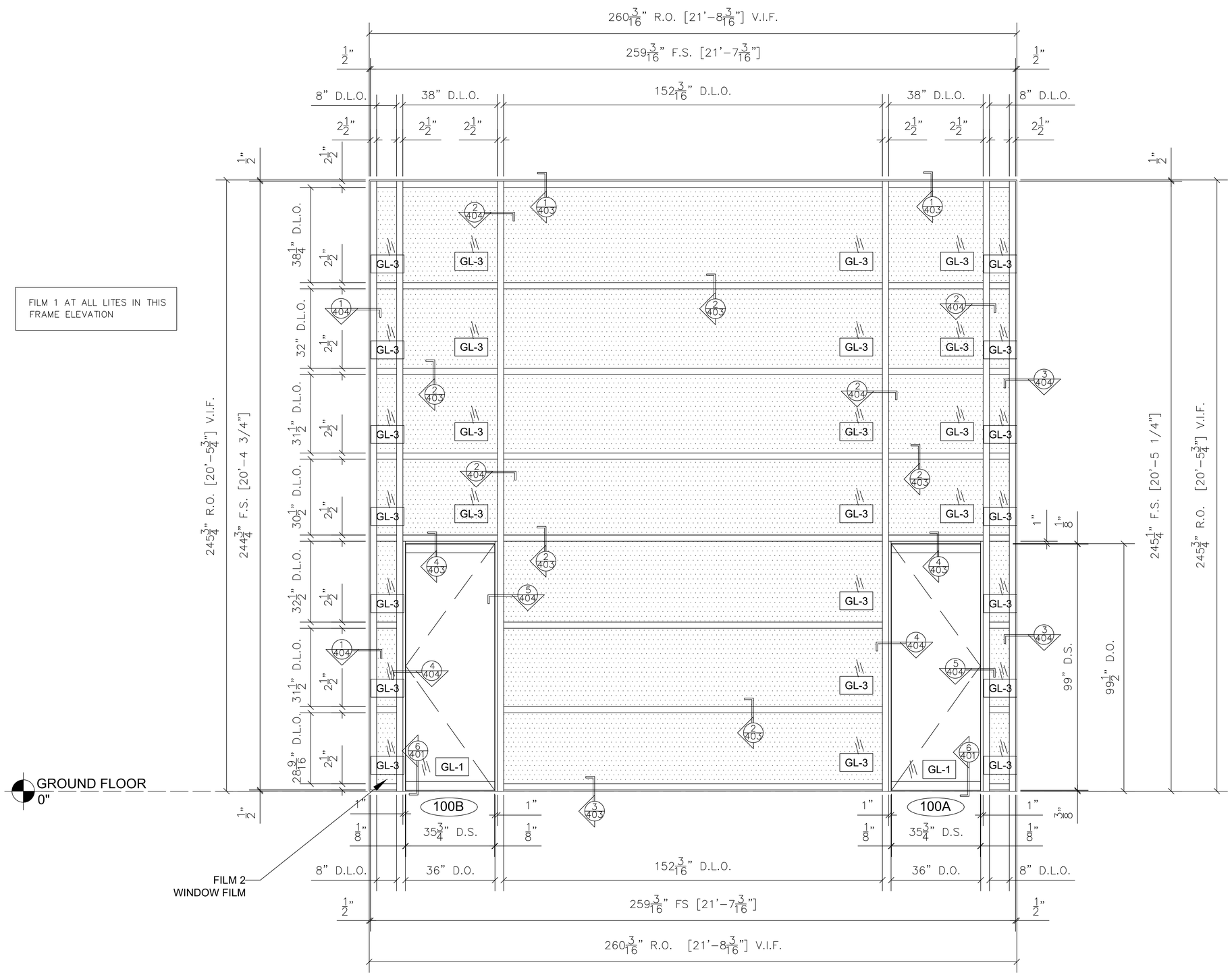

34 CURTAINWALL VESTIBULE FRAME ELEVATION

TUBELITE 400TU
CURTAIN WALL
ARCH. REF.: 7/A6.00

QTY	LOCATION
1	SECURITY VESTIBULE 101

1 TOTAL

NO.	REVISION/ISSUED	DATE
1	1ST SUBMITTAL	12/23/19

PROJECT NAME & LOCATION:

FDA

10749 WEST 84TH TERRACE
LENEXA, KANSAS 66214

SHEET TITLE:

FRAMING ELEVATION

DRAFTSMAN:

KS DRAFTING & DESIGN, LLC.
KYLE SCHNECK
HARRISBURG, PA 17110
KYLE@KSDRAFTINGDESIGNLLC.COM
717-228-7114
KSDRAFTINGDESIGNLLC.COM

ARCHITECT:

GLAZING CONTRACTOR:

DRAWN BY: KEVIN VERGARA

CHECKED BY: KYLE SCHNECK

DATE: 12/23/19

SHEET: 211

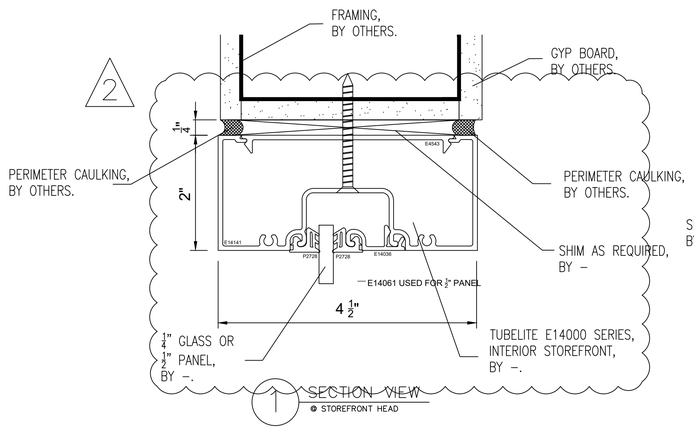

1 SECTION VIEW
@ STOREFRONT HEAD

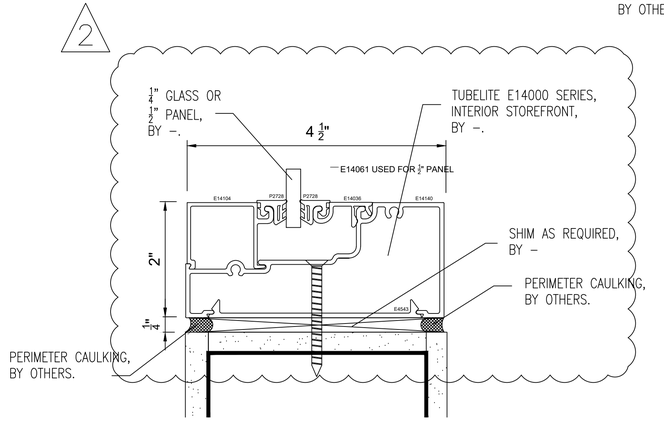

2 SECTION VIEW
@ STOREFRONT SILL

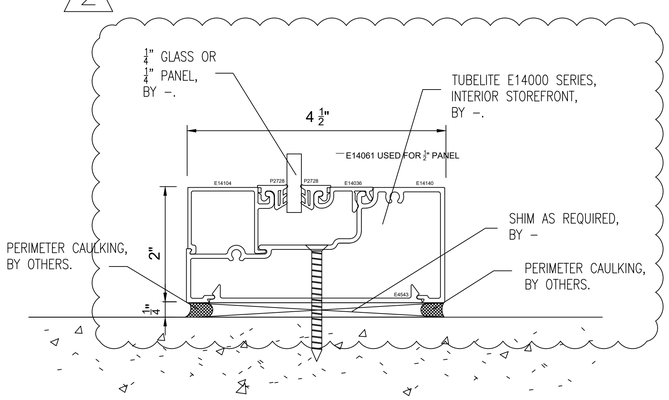

2A SECTION VIEW
@ STOREFRONT SILL

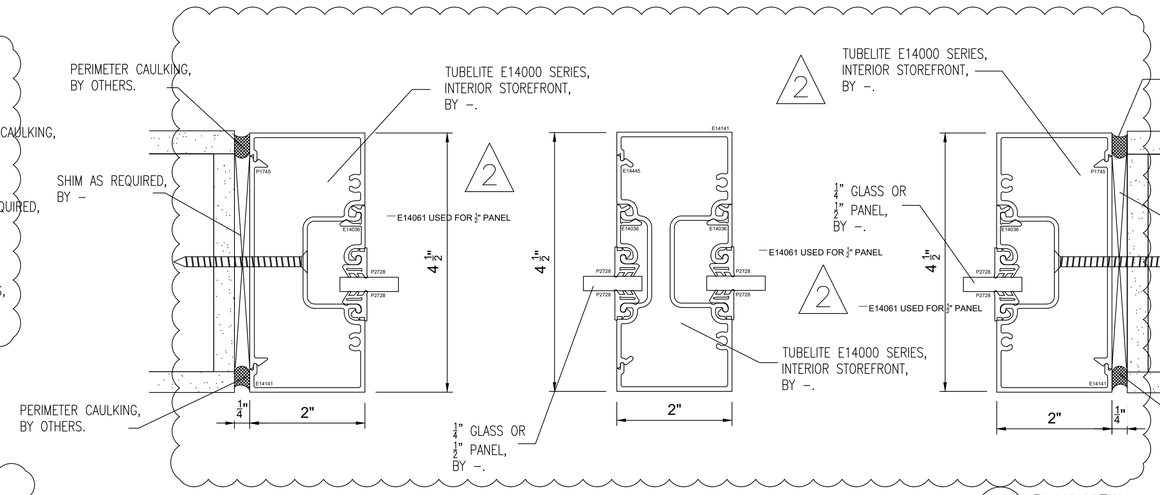

3 PLAN VIEW
@ STOREFRONT LEFT JAMB

4 PLAN VIEW
@ STOREFRONT VERTICAL

5 PLAN VIEW
@ STOREFRONT RIGHT JAMB

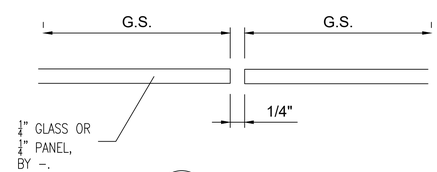

4A PLAN VIEW
@ GLASS BUTT JOINT

NO.	REVISION/ISSUED	DATE
1	1ST SUBMITTAL	12/23/19
2	PER COMMENTS	2/19/20

PROJECT NAME & LOCATION:

FDA

10749 WEST 84TH TERRACE
LENEXA, KANSAS 66214

SHEET TITLE:

DETAILS

DRAFTSMAN:

KS DRAFTING & DESIGN, LLC.
KYLE SCHNECK
HARRISBURG, PA 17110
KYLE@KSDRAFTINGDESIGNLLC.COM
717-228-7114
KSDRAFTINGDESIGNLLC.COM

ARCHITECT:

GLAZING CONTRACTOR:

DRAWN BY: KEVIN VERGARA

CHECKED BY: KYLE SCHNECK

DATE: 12/23/19

SHEET: 400

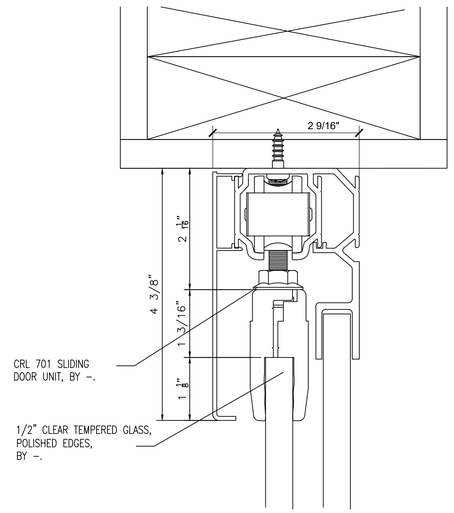

1 SECTION CUT
@ SLIDING DOOR

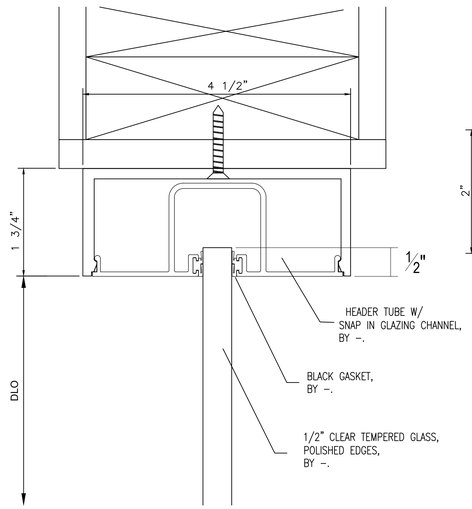

3 SECTION CUT
@ SIDELITE HEADER

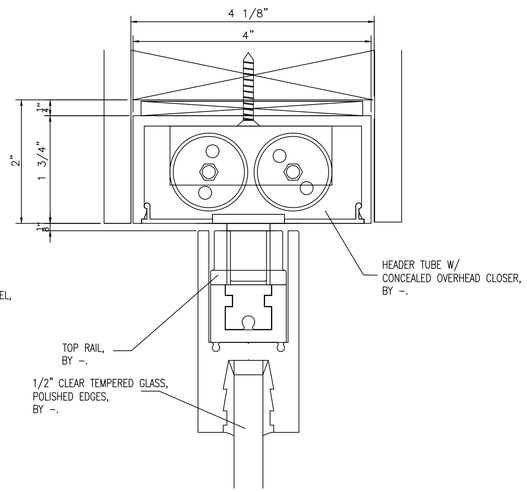

5 SECTION CUT
@ SWING DOOR

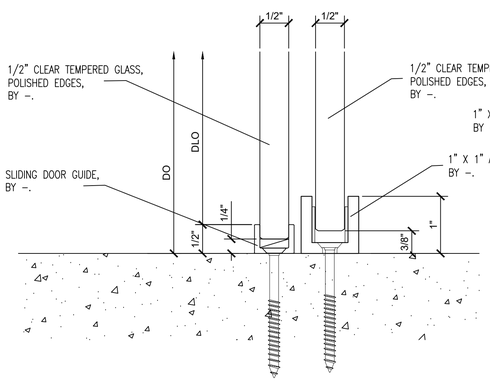

2 SECTION CUT
@ SLIDING DOOR GUIDE

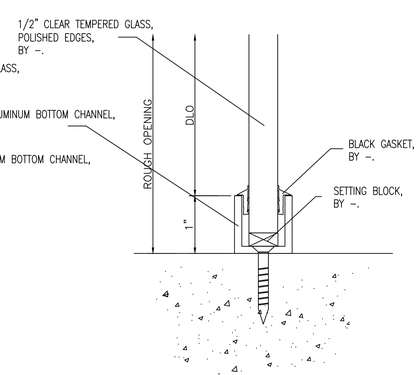

4 SECTION CUT
@ SIDELITE BOTTOM CHANNEL

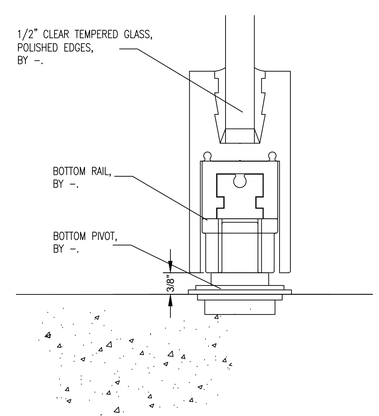

6 SECTION CUT
@ SWING DOOR

NO.	REVISION/ISSUED	DATE
1	1ST SUBMITTAL	12/23/19

PROJECT NAME & LOCATION:

FDA

10749 WEST 84TH TERRACE
LENEXA, KANSAS 66214

SHEET TITLE:

DETAILS

DRAFTSMAN:

KS DRAFTING & DESIGN, LLC.
KYLE SCHNECK
HARRISBURG, PA 17110
KYLE@KSDRAFTINGDESIGNLLC.COM
717–228–7114
KSDRAFTINGDESIGNLLC.COM

ARCHITECT:

GLAZING CONTRACTOR:

DRAWN BY: KEVIN VERGARA

CHECKED BY: KYLE SCHNECK

DATE: 12/23/19

SHEET: 401

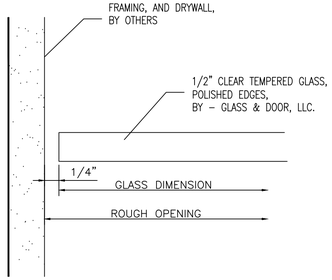

1 PLAN CUT
@ GLASS SIDELIGHT LEFT JAMB

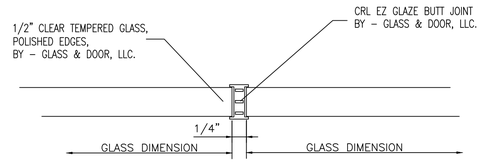

2 PLAN CUT
@ GLASS JOINT

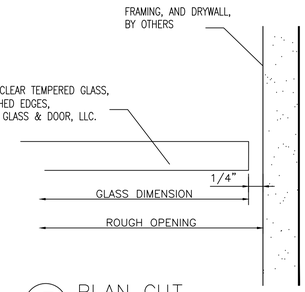

3 PLAN CUT
@ GLASS SIDELITE RIGHT JAMB

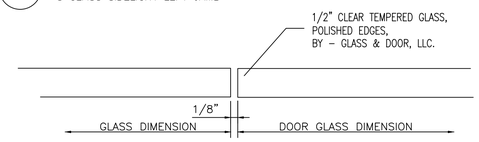

4 PLAN CUT
@ GLASS DOOR LEFT JAMB

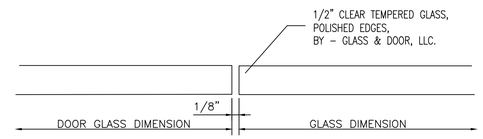

5 PLAN CUT
@ GLASS DOOR RIGHT JAMB

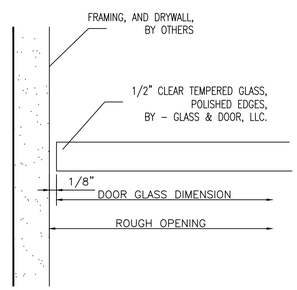

6 PLAN CUT
@ GLASS DOOR RIGHT JAMB

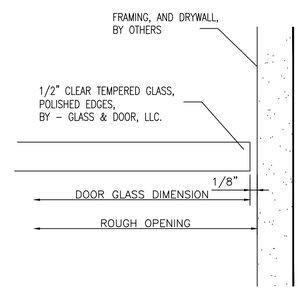

7 PLAN CUT
@ GLASS DOOR RIGHT JAMB

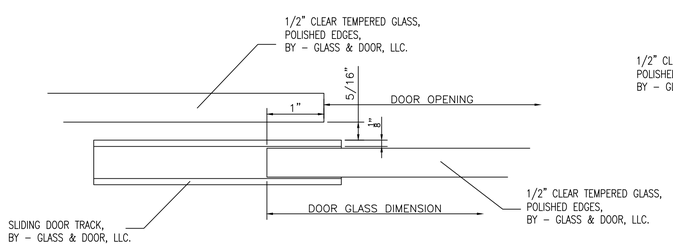

8 PLAN CUT
@ GLASS DOOR JAMB

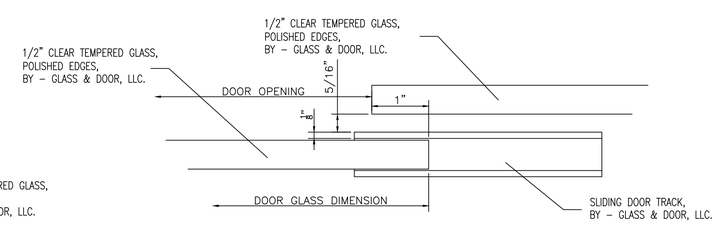

9 PLAN CUT
@ GLASS DOOR JAMB

NO.	REVISION/ISSUED	DATE
1	1ST SUBMITTAL	12/23/19

PROJECT NAME & LOCATION:

FDA

10749 WEST 84TH TERRACE
LENEXA, KANSAS 66214

SHEET TITLE:

DETAILS

DRAFTSMAN:

KS DRAFTING & DESIGN, LLC.
KYLE SCHNECK
HARRISBURG, PA 17110
KYLE@KSDRAFTINGDESIGNLLC.COM
717-228-7114
KSDRAFTINGDESIGNLLC.COM

ARCHITECT:

GLAZING CONTRACTOR:

DRAWN BY: KEVIN VERGARA

CHECKED BY: KYLE SCHNECK

DATE: 12/23/19

SHEET: 402

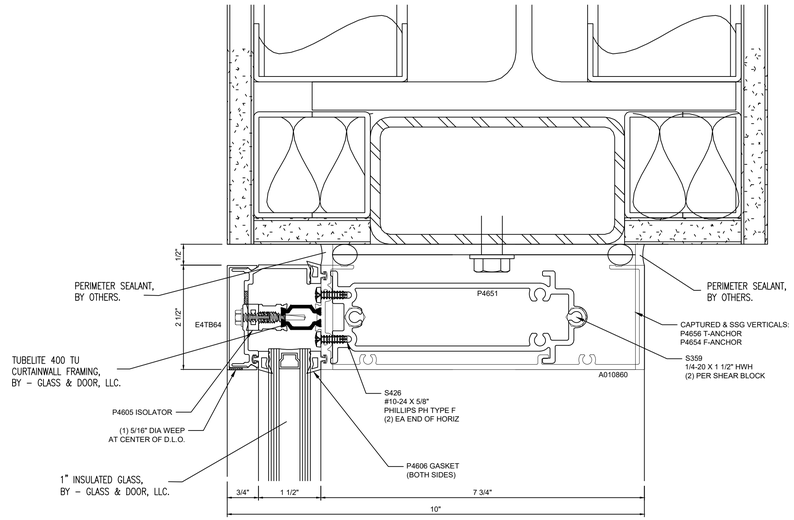

1 SECTION VIEW
@ CURTAINWALL HEAD

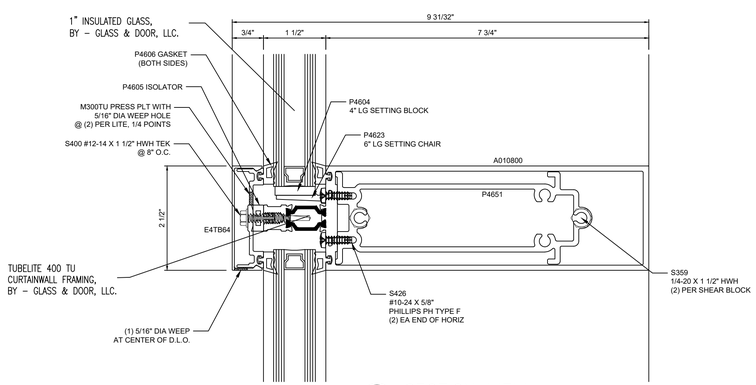

2 SECTION VIEW
@ CURTAINWALL HORIZONTAL

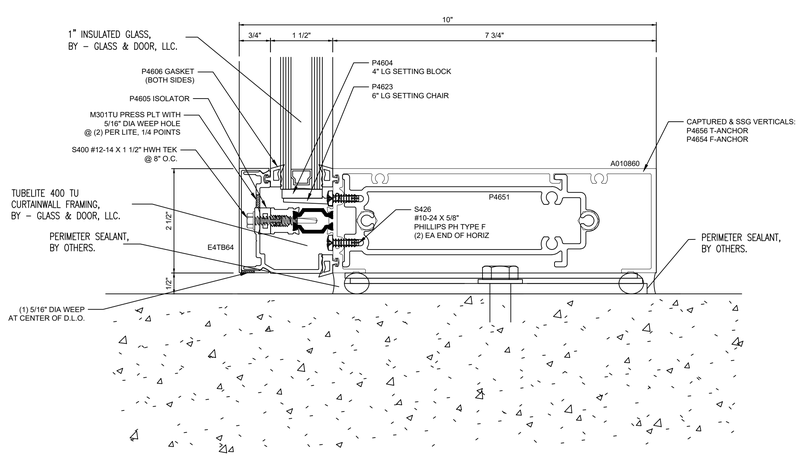

3 SECTION VIEW
@ CURTAINWALL SILL

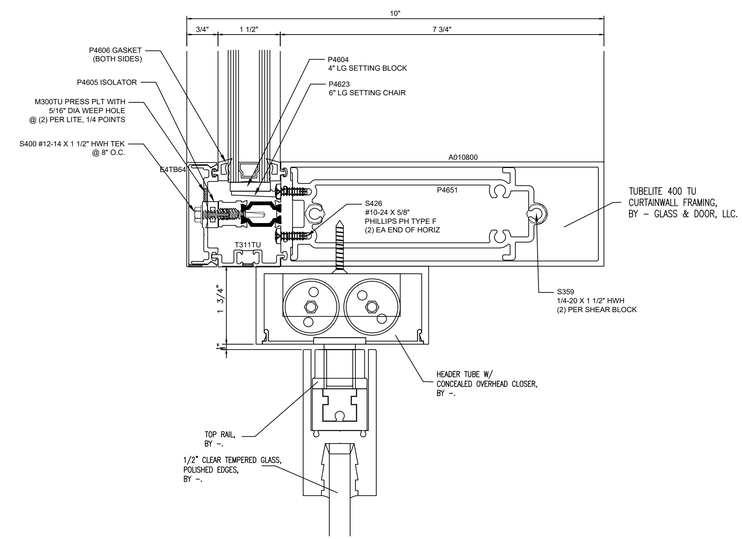

4 SECTION CUT
@ GLASS DOOR TOP RAIL

NO.	REVISION/ISSUED	DATE
1	1ST SUBMITTAL	12/23/19

PROJECT NAME & LOCATION:

FDA

10749 WEST 84TH TERRACE
LENEXA, KANSAS 66214

SHEET TITLE:

DETAILS

DRAFTSMAN:

KS DRAFTING & DESIGN, LLC.
KYLE SCHNECK
HARRISBURG, PA 17110
KYLE@KSDRAFTINGDESIGNLLC.COM
717–228–7114
KSDRAFTINGDESIGNLLC.COM

ARCHITECT:

GLAZING CONTRACTOR:

DRAWN BY: KEVIN VERGARA

CHECKED BY: KYLE SCHNECK

DATE: 12/23/19

SHEET: 403

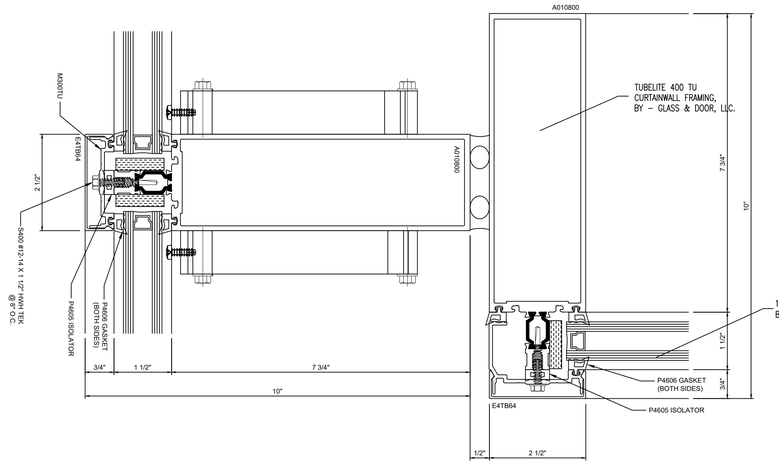

1 PLAN VIEW
@ MULLION

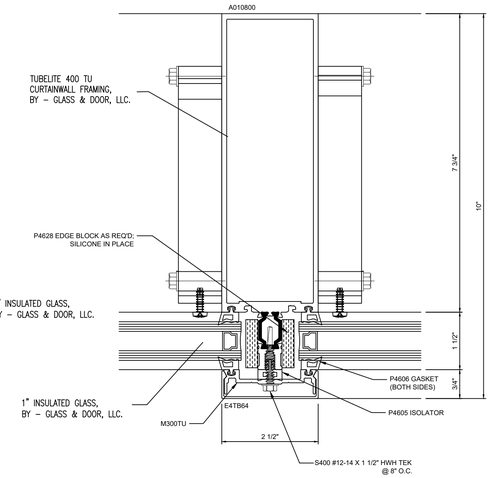

2 PLAN VIEW
@ MULLION

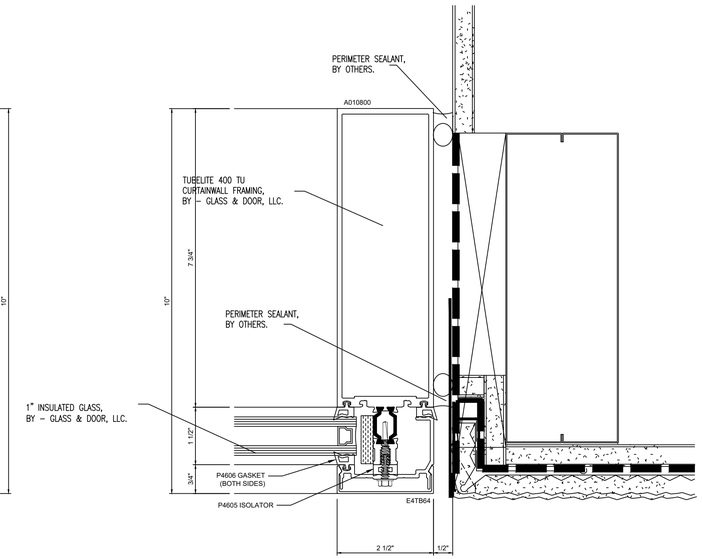

3 PLAN VIEW
@ MULLION

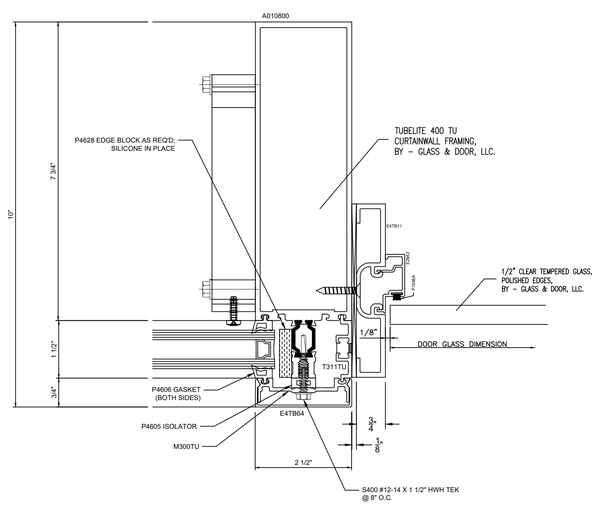

4 PLAN VIEW
@ DOOR JAMB

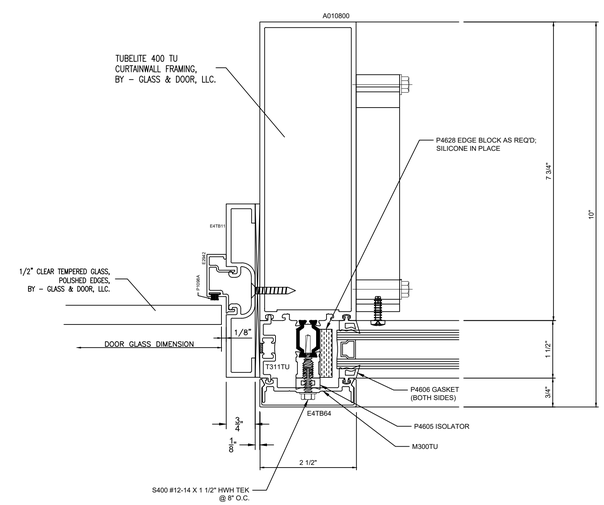

5 PLAN VIEW
@ DOOR JAMB

NO.	REVISION/ISSUED	DATE
1	1ST SUBMITTAL	12/23/19

PROJECT NAME & LOCATION:

FDA

10749 WEST 84TH TERRACE
LENEXA, KANSAS 66214

SHEET TITLE:

DETAILS

DRAFTSMAN:

KS DRAFTING & DESIGN, LLC.
KYLE SCHNECK
HARRISBURG, PA 17110
KYLE@KSDRAFTINGDESIGNLLC.COM
717–228–7114
KSDRAFTINGDESIGNLLC.COM

ARCHITECT:

GLAZING CONTRACTOR:

DRAWN BY: KEVIN VERGARA

CHECKED BY: KYLE SCHNECK

DATE: 12/23/19

SHEET: 404